FHWA REGION NO.	STATE	PROJECT NO.	FISCAL YEAR	SHEET NO.	TOTAL SHEETS
7	KANSAS	87N-0094-01	1998	85	202

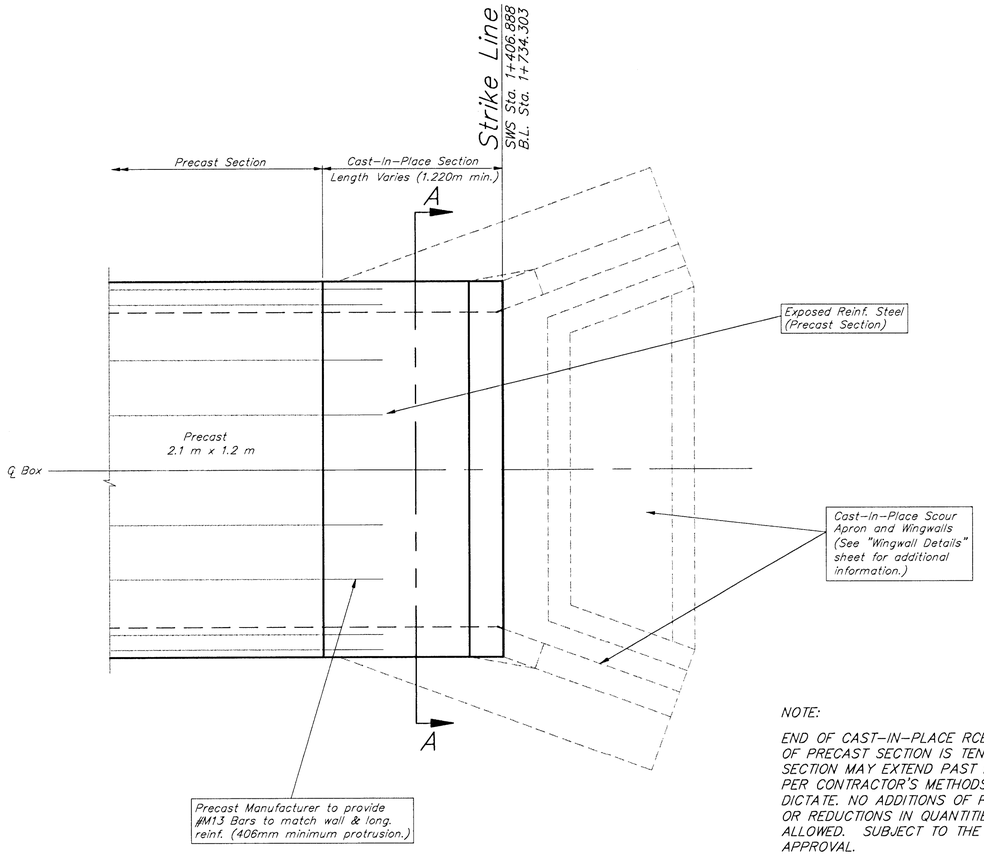

PLAN

NOTE:

END OF CAST-IN-PLACE RCB & BEGINNING OF PRECAST SECTION IS TENTATIVE. EITHER SECTION MAY EXTEND PAST LIMITS SHOWN PER CONTRACTOR'S METHODS & AS CLEARANCES DICTATE. NO ADDITIONS OF PRECAST RCB OR REDUCTIONS IN QUANTITIES WILL BE ALLOWED. SUBJECT TO THE ENGINEER'S APPROVAL.

NUMBER & LOCATION OF REINF. BARS ARE SHOWN FOR REPRESENTATION ONLY. CONTRACTOR TO DETERMINE ACTUAL NUMBER BASED ON TYPICAL SECTION AND REQUIRED SPACING.

NOTE:
DIMENSIONS SHOWN FOR PRECAST SECTIONS ARE DERIVED FROM INDUSTRY STANDARDS. CONTRACTOR SHALL TAKE NOTE THAT PRECAST DIMENSIONS MAY VARY DEPENDING ON PRECAST MANUFACTURER'S PRODUCTS.

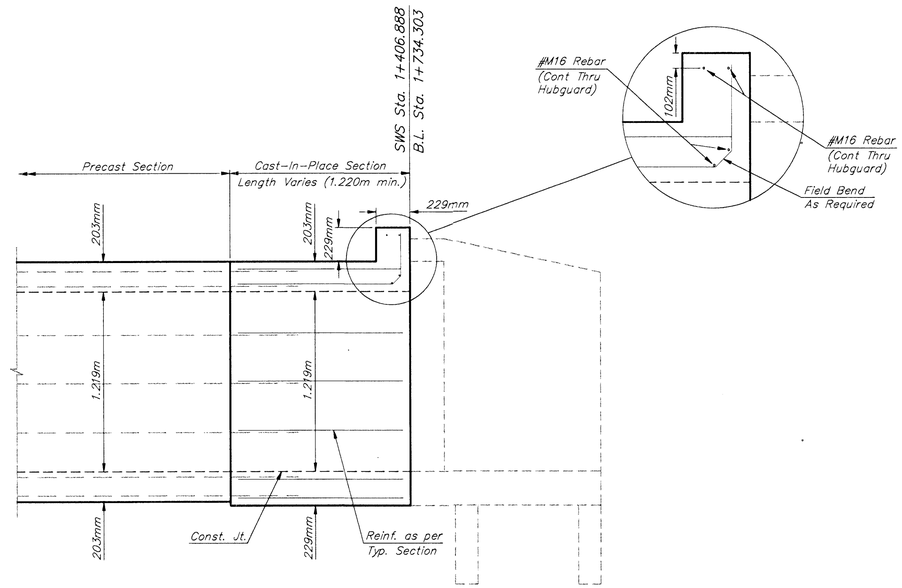

SECTION AND ELEVATION

Note:
Reinforcing Steel Sizes are Designated in Metric Sizes.

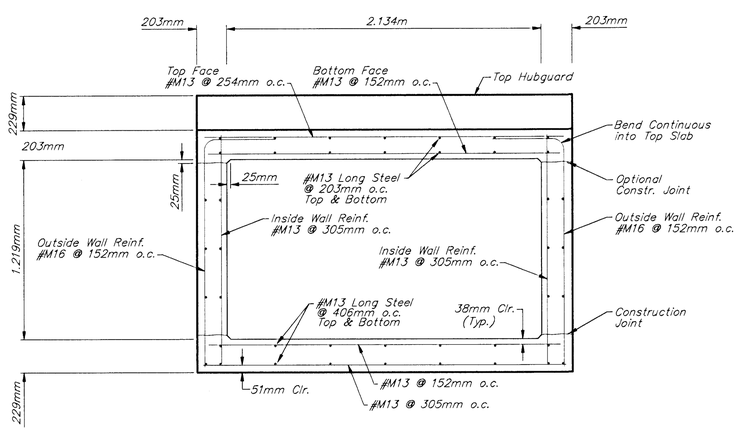

TYPICAL SECTION
SECTION A-A

CONCRETE: Class AAA Concrete shall be used throughout for the cast-in-place. Class AAA concrete and Class A concrete shall comply to Section 402 of the 1990 Kansas State Department of Transportation Standard Specifications for State Road and Bridge Construction.

SEAL COURSE: A seal course may be constructed below the R.C.B. as shown in the plans. The seal course shall consist of 75mm of Class A concrete below all cast-in-place concrete. The seal course below precast sections shall consist of either 75mm of Class A concrete or a 150mm granular base (type BD-1 or UD-1) at the Contractor's option. No reinforcing shall be placed until the seal course has gained sufficient strength to permit working upon it without injury.

JOINTS: Construction joints shall only be formed at locations shown or as approved by the Engineer.

KDOT METRIC

Minimum Splice Lengths

#13	406mm
#16	508mm
#19	610mm

GENERAL NOTES

1. THE CAST-IN-PLACE END SECTION SHALL BE SUBSIDIARY TO THE BID ITEM "REINFORCED CONCRETE BOX (2.1 m x 1.2 m) (Precast)" AND SHALL INCLUDE ALL CONCRETE, REINFORCEMENT, FORMWORK EXCAVATION, AND ALL OTHER INCIDENTALS NECESSARY TO CONNECT RCB SECTIONS.
2. WINGWALLS AND THAT PORTION OF THE RCB OUTSIDE THE STRIKE LINE SHALL BE CONSTRUCTED LEVEL. FOOTINGS FOR WINGWALLS SHALL BE CONSTRUCTED WITH THE CULVERT FLOOR. SEE WINGWALL DETAIL SHEETS.
3. ALL EXISTING CONCRETE SURFACES ADJACENT TO NEW CONCRETE SHALL BE THOROUGHLY CLEANED BY BRUSHING, AND SOAKED WITH WATER IMMEDIATELY PRIOR TO PLACING NEW CONCRETE.
4. ALL EXPOSED CONCRETE EDGES SHALL BE BEVELED 19mm.
5. ALL REINFORCING STEEL TO HAVE MINIMUM 38mm CONC. COVER.

PROJECT NUMBER					PROJ NUMBER / DIRECTORY / SHEET NAME	STORM SEWER IMPROVEMENTS	BAUGHMAN COMPANY P.A.	SHEET
472 - 82906					95-05-E026 / centzoo\sws / rcbdetl.dwg	RCB DETAILS	ENGINEERING, SURVEYING, & PLANNING	85 OF 202
DESIGN STAFF	DRAWN STAFF	APPROVED JFB	DATE NOV 98	SCALE NONE		CENTRAL AVENUE - PHASE 1 - WEST ST TO MCLEAN	316-262-7271 • 315 ELLIS • WICHITA, KANSAS 67211	