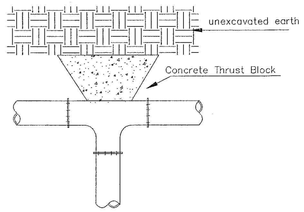

TEE

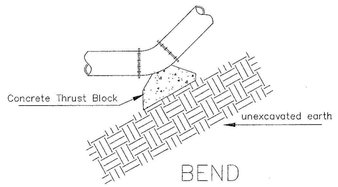

BEND

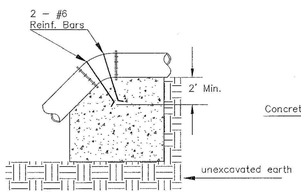

VERTICAL BEND

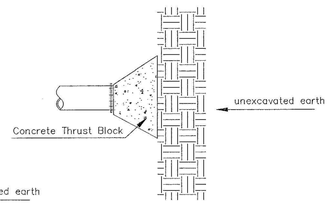

PLUG

PIPE SIZE	THRUST AT FITTINGS IN TONS–AT 150#/IN^{2}P					
	PLUG	90°	45°	22 1/2°	11 1/4°	TEE
6"	2.8	3.95	2.15	1.09	.55	2.8
8"	4.9	6.95	3.75	1.90	.96	4.9
12"	11.4	16.1	8.75	4.45	2.25	11.4
16"	20.15	28.5	15.4	7.85	3.95	20.15
20"	31.15	44.0	23.85	12.15	6.10	31.15
24"	44.55	63.0	34.1	17.4	8.75	44.55

TYPICAL THRUST BLOCKS

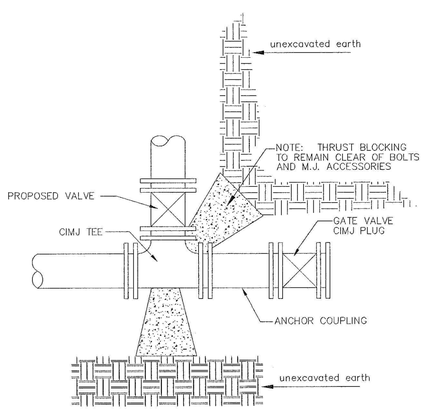

KEY BLOCK DETAIL

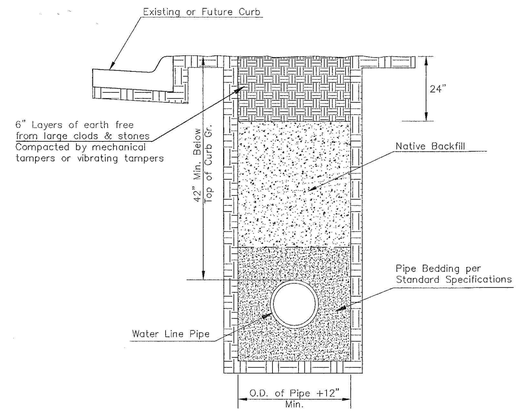

TRENCH COMPACTION IN ROAD RIGHT–OF–WAY

SIDE VIEW

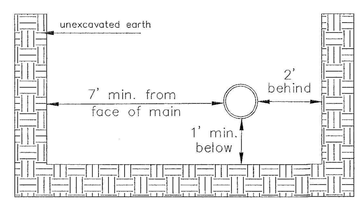

Note: When shoring is required it is to be per The City of Wichita Standard Specifications.

TOP VIEW

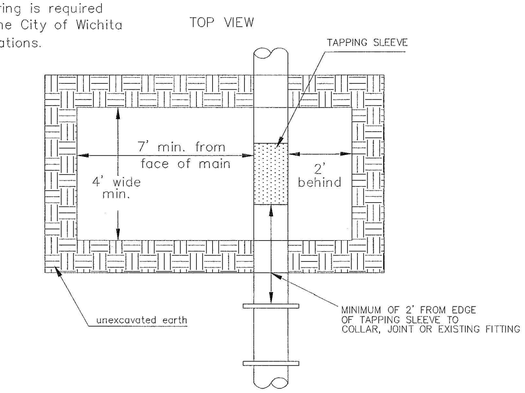

EXCAVATION FOR WET TAP

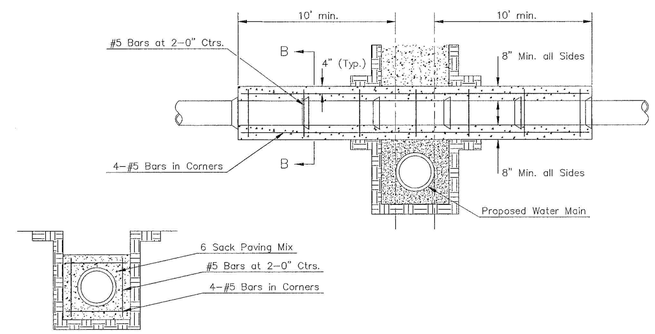

Note: Encasement to begin and end at a Bell on Sanitary Sewer Pipe.

SECTION B–B

REINFORCED CONCRETE ENCASEMENT OF SANITARY SEWER

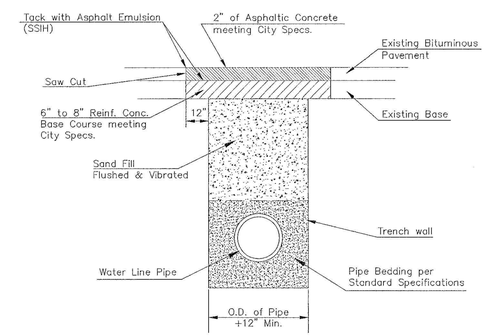

PAVEMENT REPLACEMENT & TRENCH COMPACTION UNDER EXISTING AND PROPOSED CITY ROADS

* PLANS GOVERN UNLESS OTHERWISE NOTED ON PLANS

REVISED: JULY 2015

GARY L. JANZEN LICENSED 16294 KANSAS PROFESSIONAL ENGINEER 07/21/15

CITY OF WICHITA
PUBLIC WORKS & UTILITIES ENGINEERING DIVISION

MISCELLANEOUS WATER DETAILS

CITY ENGINEER
GARY JANZEN, P.E..

PROJECT NUMBER	OCA NUMBER	DATE

CITY ENGINEER'S OFFICE
CITY HALL - SEVENTH FLOOR
455 NORTH MAIN STREET
WICHITA, KANSAS 67202-1620
(316) 268-4501

SHEET

WL-104

REV.	DESCRIPTION	DATE

SCHURR ADDITION
WATER IMPROVEMENTS

WICHITA, SEDGWICK COUNTY, KS

CERTIFIED ENGINEERING DESIGN, P.A.
CIVIL ENGINEERING SERVICES

CED

1935 WEST MAPLE STREET
WICHITA, KANSAS 67213
PH.(316)262-8808 FAX.(316)262-1669

LOGAN J. MILLS LICENSED 24468 4-24-18 KANSAS PROFESSIONAL ENGINEER

PROJECT NO.: 20182509
ISSUE DATE: 04/24/2018
CONTACT: H. FORAKER / L. MILLS
CHECKED BY: H. FORAKER / L. MILLS

MISCELLANEOUS WATER DETAILS

FILE LOCATION: S:\Drawing Files\Projects\20182509\DWG\Water.dwg TAB NAME: Misc Water USER: cascawyer SAVED: 4/24/2018 2:18 PM PLOTTED: 4/24/2018 2:20 PM