FHWA REGION NO.	STATE	PROJECT NO.	YEAR	SHEET NO.	TOTAL SHEETS
7	KANSAS	87N-0094-01	1998	185	202

Ⓐ 8 mm × 64 mm Carriage bolt, flat washer and nut
Ⓑ 8 mm × 150 mm Carriage bolt, flat washer and nut
Ⓒ 8 mm × 200 mm Carriage bolt, flat washer and nut
Ⓓ 8 mm × 38 mm Carriage bolt, flat washer and nut

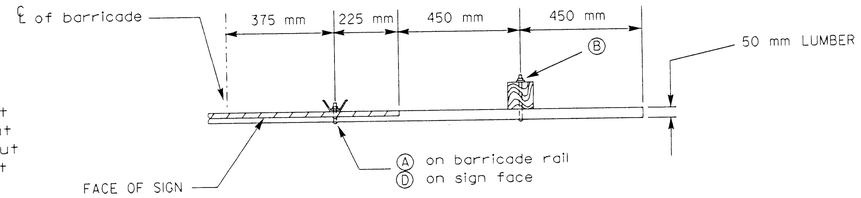

PARTIAL PLAN VIEW
NOT TO SCALE

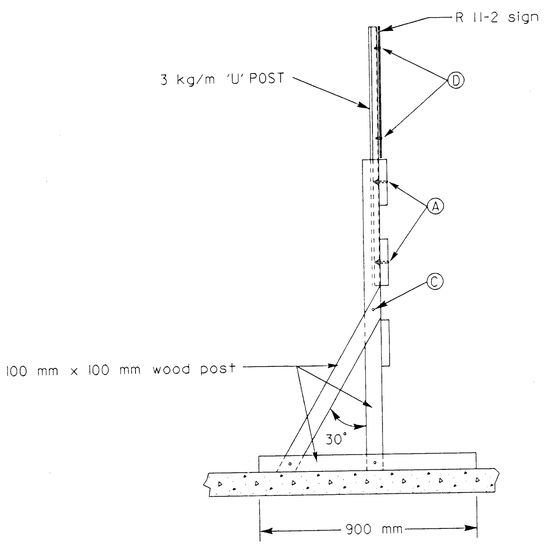

SIDE VIEW
SECTION A-A

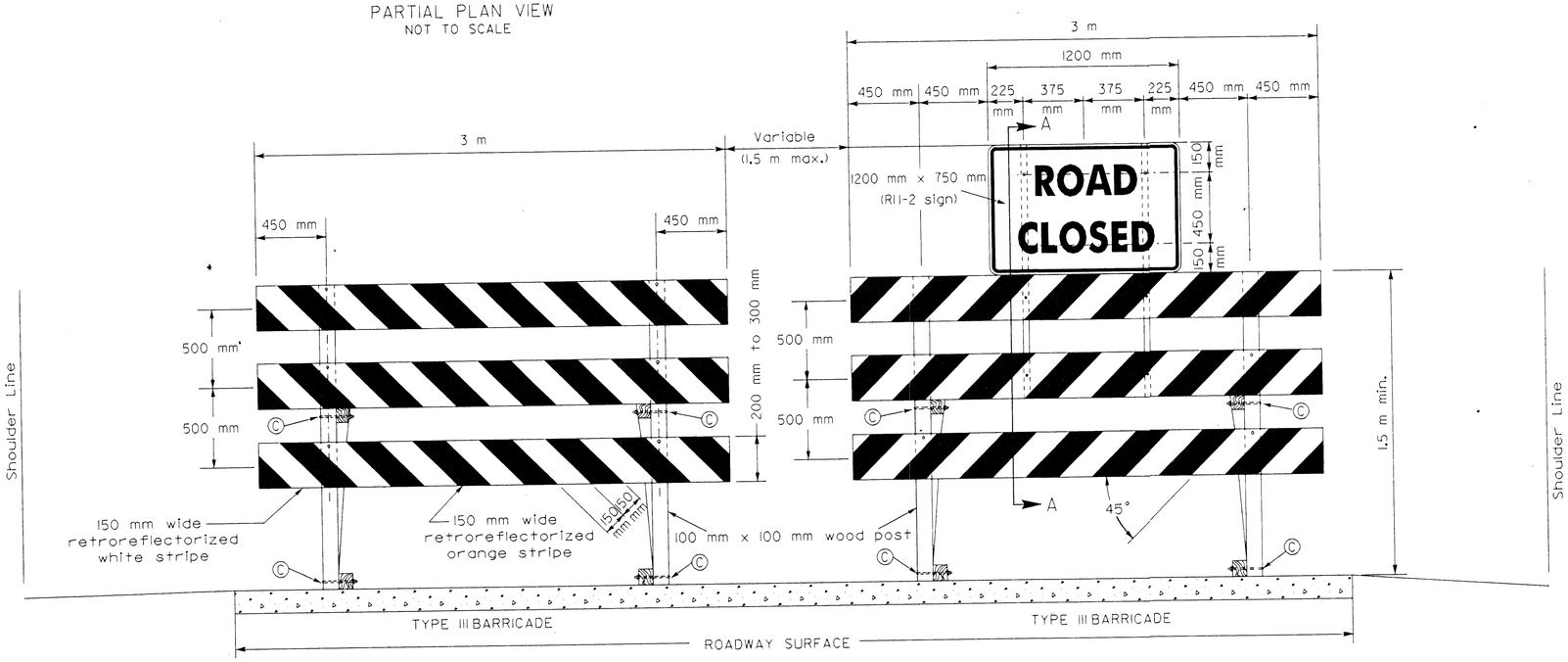

FRONT VIEW

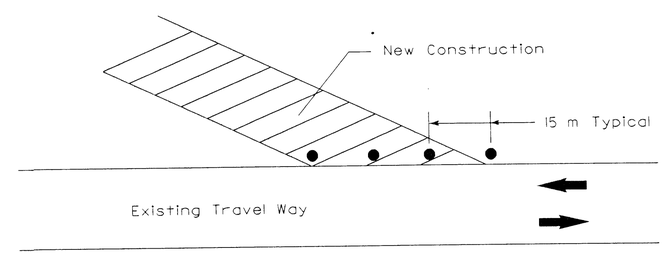

GENERAL NOTES:

THE BARRICADES, DRUMS, AND SIGNS ARE TO BE INCLUDED IN THE BID ITEM OF CONSTRUCTION BARRICADES, REFLECTORIZED DRUMS, AND CONSTRUCTION SIGNS, RESPECTIVELY.

BARRICADES, DRUMS, AND SIGNS LISTED ON THIS SHEET ARE TO BE MAINTAINED BY THE CONTRACTOR AT THE LOCATIONS INDICATED FOR THE INTERIM BETWEEN PROJECTS AS DIRECTED BY THE ENGINEER.

TYPE III BARRICADES PLACED ACROSS A ROADWAY SHALL BE SUITABLY DISTRIBUTED ACROSS THE ROAD TO EFFECTIVELY CLOSE THE ROADWAY.

BARRICADES ARE TO BE SET AT EACH ROAD TO BE CLOSED AS SPECIFIED ON THE PLANS.

FOR WOODEN BARRICADES, NOMINAL LUMBER DIMENSIONS WILL BE SATISFACTORY.

THE ENTIRE AREA OF BARRICADE RAILS SHALL BE FULLY REFLECTORIZED WITH TYPE II HIGH PERFORMANCE RETROREFLECTIVE SHEETING.

BARRICADES INTENDED FOR USE ON ROADWAYS WITH SPEED LIMITS OF 55 MPH OR MORE SHALL HAVE A MINIMUM OR 0.175 SQUARE METERS OF RETROREFLECTIVE AREA FACING TRAFFIC.

THE STRIPES SHALL SLOPE DOWNWARD AND TOWARD THE CENTER OF THE ROADWAY AT ROAD CLOSURES

SUMMARY OF TRAFFIC CONTROL DEVICES
TO BE MAINTAINED BETWEEN PROJECTS

QTY. BARRICADES	QTY. DRUMS	QTY./MUTCD NO.	STATION	LOCATION-DESCRIPTION

● Reflectorized Drums - For use when roadway is graded and/or surfaced, but will be opened to traffic at a later date.

185/202

NO.	DATE	REVISIONS	BY	APP'D
3				
2				
1	6/21/96	REVISE NOTES, SUMMARY & TITLE BLOCK- ADD SKETCH	WPR	NAB

KANSAS DEPARTMENT OF TRANSPORTATION

TRAFFIC CONTROL DEVICES MAINTAINED BY CONTRACTOR BETWEEN PROJECTS

TE758SI 2-20-96

FHWA APPROVAL 8-1-96		APP'D Nelda A. Buckley	
DESIGNED KFH	DETAILED KFH	QUANTITIES	TRACED
DESIGN CK.	DETAIL CK.	QUAN. CK.	TRACE CK.