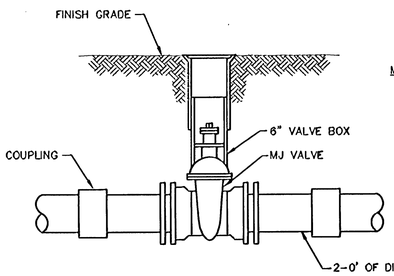

MATERIALS LIST
1-MJ GATE OR BUTTERFLY VALVE (AS PER PLAN)
1-6" VALVE BOX
2-COUPLINGS
2-SHORT PCS. (DICL SJ PIPE)
CONCRETE SUPPORT BLOCK SHALL BE FULL WIDTH OF THE TRENCH

LINE VALVE ASSEMBLY

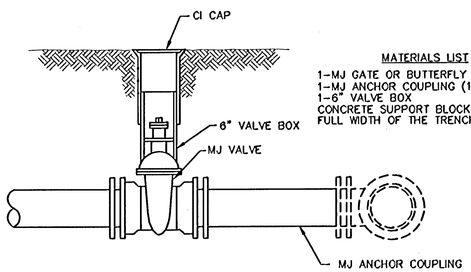

MATERIALS LIST
1-MJ GATE OR BUTTERFLY VALVE (AS PER PLAN)
1-MJ ANCHOR COUPLING (12" OR SMALLER)
1-6" VALVE BOX
CONCRETE SUPPORT BLOCK SHALL BE FULL WIDTH OF THE TRENCH

ANCHORED VALVE ASSEMBLY

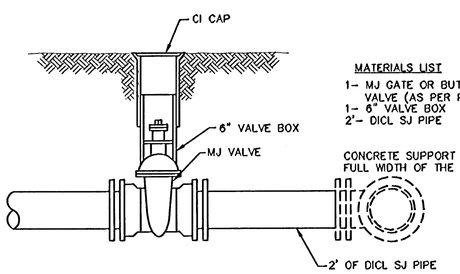

MATERIALS LIST
1- MJ GATE OR BUTTERFLY VALVE (AS PER PLAN)
1- 6" VALVE BOX
2'- DICL SJ PIPE

CONCRETE SUPPORT BLOCK SHALL BE FULL WIDTH OF THE TRENCH

VALVE ASSEMBLY

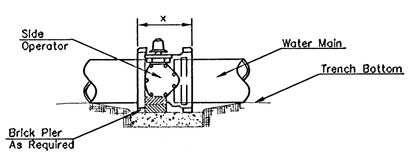

NOTES

1. This detail covers Butterfly Valve installation, inclusive, regardless of type of pipe or joint used. Larger lines to be detailed on plans.
2. 6" Valve Box and Cover required per City of Wichita Std. Specifications.
3. Conc. Support Block to be full width of trench.

CONCRETE SUPPORT BLOCKING FOR BUTTERFLY VALVE INSTALLATION

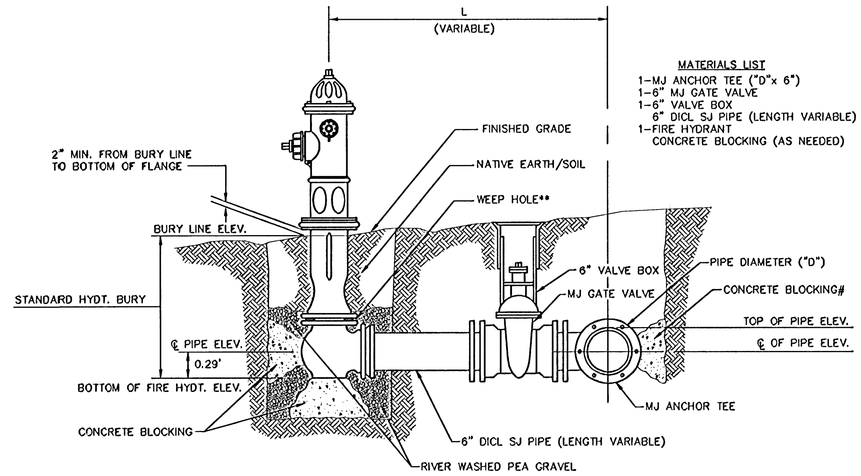

MATERIALS LIST
1-MJ ANCHOR TEE ("D"x 6")
1-6" MJ GATE VALVE
1-6" VALVE BOX
6" DICL SJ PIPE (LENGTH VARIABLE)
1-FIRE HYDRANT
CONCRETE BLOCKING (AS NEEDED)

** CAUTION! WEEP HOLES TO BE KEPT CLEAR DURING CONSTRUCTION AND BACKFILL. CONCRETE FOR THRUST BLOCKING SHALL NOT OBSTRUCT WEEP HOLES.

CONCRETE THRUST BLOCKING SHALL BE KEPT CLEAR OF BOLTS, NUTS, AND MJ ACCESSORIES.

* IF HYDRANT BURY IS IN EXCESS OF 5', CONTRACTOR SHALL USE STANDARD 5' HYDRANT BURY AND HYDRANT BARREL EXTENSIONS AS NECESSARY.

FIRE HYDRANTS REQUIRED

LINE	STATION	BURY LINE ELEVATION	TOP OF PIPE ELEVATION	FIRE HYDRANT BURY REQUIRED*
1	0+00	74.97	67.80	7.97'
8	0+00	79.00	75.29	4.84'

FIRE HYDRANT ASSEMBLY

PER CITY OF WICHITA SPECIFICATIONS

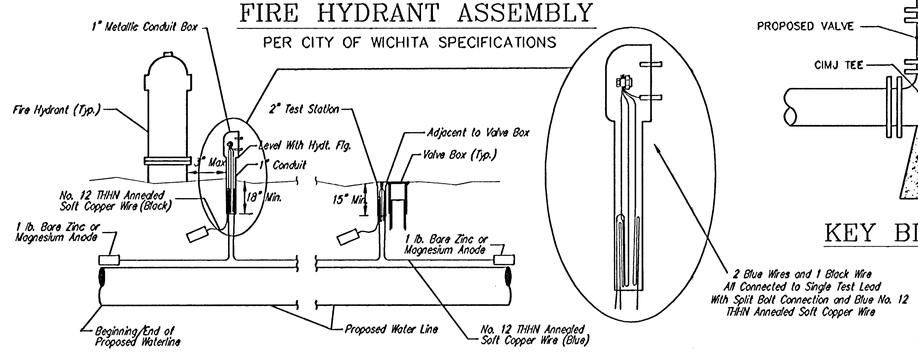

TRACER WIRE
Conductive type pipe locator/tracer wire shall be installed to locate all waterline pipe regardless of pipe material. The wire shall extend the entire length of the proposed pipe. The wire shall be taped to the waterline and pulled with the pipe. Split-bolt connectors shall be used at splice locations. Electrical tape shall cover all splices so no bare wire is exposed. Test stations shall be installed adjacent to all fire hydrants along the waterline and at blowoffs or valves near the ends of the waterlines. Any exceptions to the location of test stations shall be approved by the engineer. At each test station, the tracer wire shall be connected to a 1 lb. Zinc or magnesium anode. Anodes shall also be attached to the tracer wire at both the beginning and the end of the proposed waterline. A typical layout of the tracer wire and test station is provided in the above figure.
WIRE
The tracer wire shall be Blue No. 12 THHN annealed soft copper wire with thermal plastic insulation. The insulation shall be heat, oil, and gasoline resistant as manufactured by Temple Electric or approved equal. To allow for grade adjustment, a minimum of 12" of excess wire shall be coiled at the bottom of the test station for all wires. The insulation sheathing shall be removed such that 1" bare copper wire is exposed at all points of connection. Contractor shall attach wire being installed with proposed water main to any tracer wire installed with adjacent waterline projects.
TEST STATIONS
The test station for fire hydrant applications shall be a 1 inch galvanized conduit style test station as manufactured by AGRA Industries with a removable solid cover having two leads extending from the face or approved equal. The test station for valve applications shall be 2 inch flush style test station T2PS3B as manufactured by HANDLEY Industries or approved equal. The conduit style shall be attached to a 1 inch rigid galvanized conduit with a minimum length of 36" and plastic end bushing. The flush style shall have the word "WATER" stamped or molded into the lid. All test stations shall be manufactured using molded blue tops or sufficiently coated with blue enamel paint. The tracer wire and the anode wire shall be installed to allow 10 inches of wire within the test station. In concrete environments such as sidewalks or in the downtown area the contractor shall use the flush style test station. The location of all test stations shall be approved by the engineer, recorded, and shown in the as-built drawings.
ANODES
The anodes shall be 1 lb. bare zinc or magnesium. The anodes shall be buried at the same elevation as the waterline at each test station. The anodes shall be connected to Black No. 12 THHN annealed soft copper wire which shall be extended to the test station.

TRACER WIRE DETAIL

COST IS SUBSIDIARY TO PIPE INSTALLATION

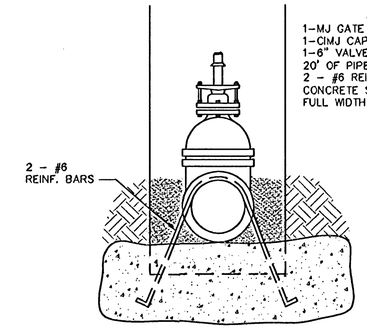

MATERIALS LIST
1-MJ GATE OR BUTTERFLY VALVE (AS PER PLAN)
1-CIMJ CAP WHEN NECESSARY
1-6" VALVE BOX
20' OF PIPE (BID WITH PIPE)
2 - #6 REINF. BARS
CONCRETE SUPPORT BLOCK SHALL BE FULL WIDTH OF THE TRENCH

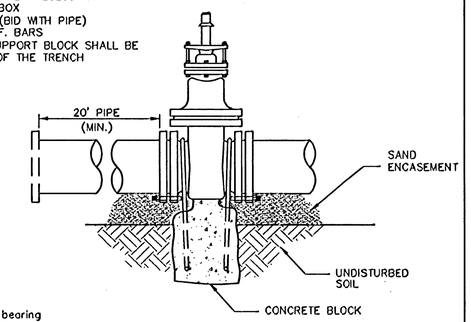

Notes:
1. Concrete Block at Valve to have sufficient bearing in undisturbed soil to prevent thrust movement as shown in table at right. Field Engineer to determine thrust loading of undisturbed soil and final size of thrust block.

2. The thrust block shall be constructed such that bolts, nuts, and other MJ accessories are kept clear of concrete.

3. All valves at dead ends and at other locations as called out on the plans shall be blocked as shown here.

THRUST AT VALVES

VALVE	THRUST AT 150 #/in²
4"	1809 lbs.
6"	4245 lbs.
8"	7540 lbs.
12"	16965 lbs.

ANCHORED VALVE ASSEMBLY, SPECIAL

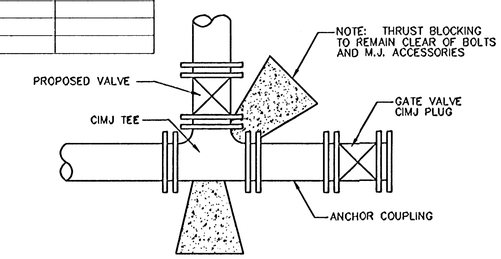

KEY BLOCK DETAIL

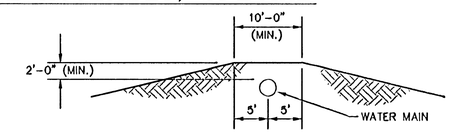

PROTECTIVE FILL DETAIL

MINIMUM PROTECTIVE FILL SHALL BE PROVIDED IN ALL INSTANCES WHERE COVER OVER THE PROP. WATER LINE IS LESS THAN (2) FEET. (COST SUBSIDIARY TO PIPE INSTALLATION)

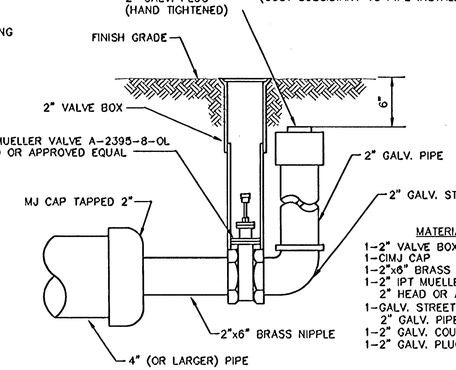

MATERIALS LIST
1-2" VALVE BOX
1-CIMJ CAP
1-2"x6" BRASS NIPPLE
1-2" IPT MUELLER VALVE A-2395-8-OL
2" HEAD OR APPROVED EQUAL
1-GALV. STREET EL.
2" GALV. PIPE (AS REQUIRED)
1-2" GALV. COUPLING
1-2" GALV. PLUG (HAND TIGHTENED)

2" BLOWOFF ASSEMBLY

Revised: 6-7-00, MCG

THE CITY OF WICHITA

CITY ENGINEER'S OFFICE
CITY HALL - SEVENTH FLOOR
455 NORTH MAIN STREET
WICHITA, KANSAS 67202
(316) 268-4501
(316) 268-8114 FAX

STANDARD WATER ASSEMBLY DETAILS

NEIL CABLE, P.E. - CITY ENGINEER

PROJECT NUMBER	INDEX CODE
448 89923	636130

DATE	
March 04	SHEET 63 OF 143