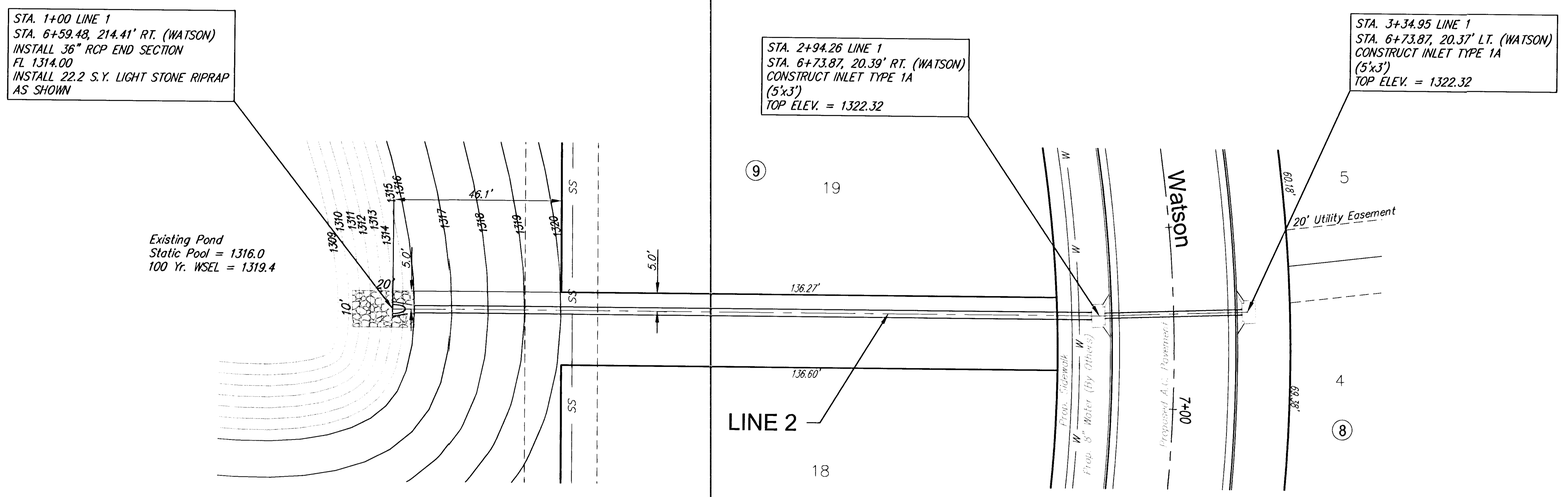

SCALE 1" = 20'
IRON = ●

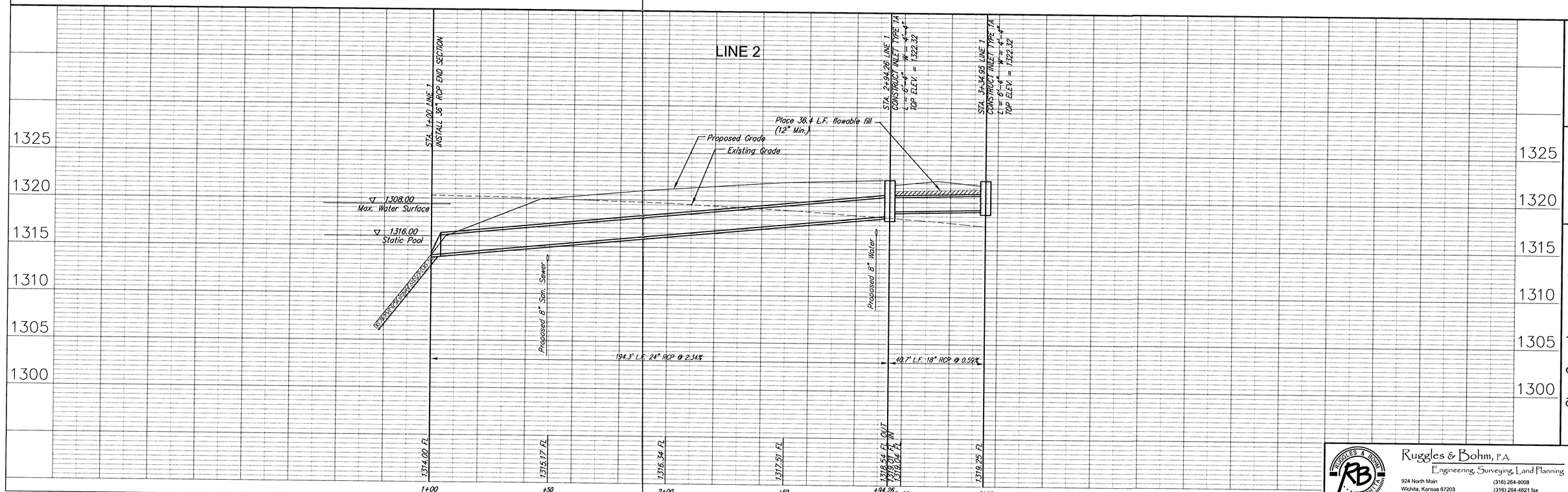

DESIGN KWL	DRAWN TEB
UTILITY	DATE July 30, 2003
PROJECT NUMBER 472-83743	REVISED
DRAWING FILE storm sewer {SWS 2}	REVIEW

Storm Sewer Improvements
SWS Line 2
WICHITA, KANSAS

Ruggles & Bohm, P.A.
Engineering, Surveying, Land Planning
924 North Main
Wichita, Kansas 67203
www.rbkansas.com
(316) 264-8008
(316) 264-4621 fax
E-mail: info@rbkansas.com

RB JOB 2370E