| FHWA REG NO. | STATE | PROJECT NO. | YEAR | SHEET NO. | SHEETS |
|---|---|---|---|---|---|
| 7 | KANSAS | 472-83842 | 03 | 8 | ~~40~~ |

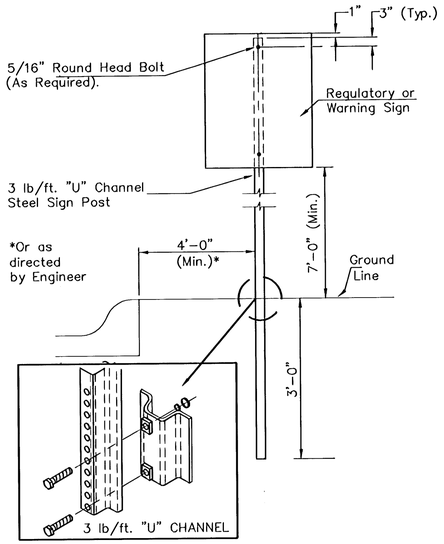


*TYPICAL TRAFFIC CONTROL SIGN MOUNTING INSTALLATION*

*CURB AND GUTTER SECTION*

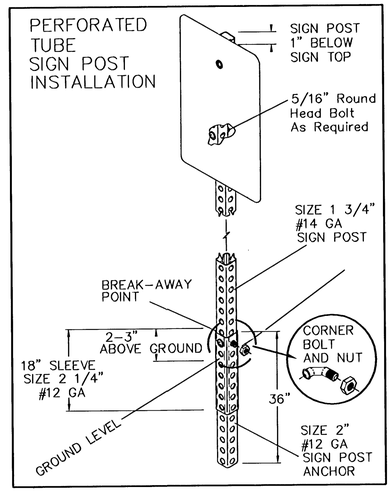


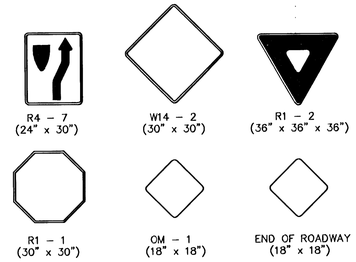


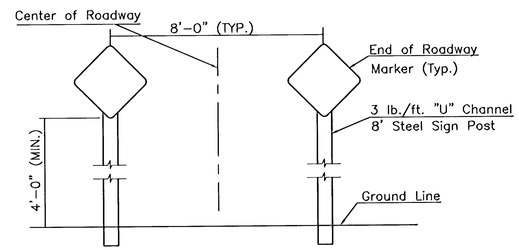


*TYPICAL END OF ROADWAY SIGN MOUNTING INSTALLATION*

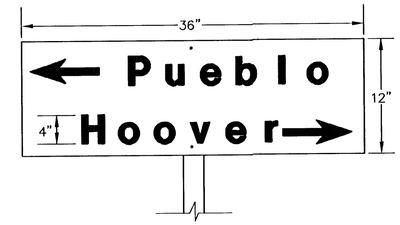


*FLAT PLATE STREET NAME SIGN*

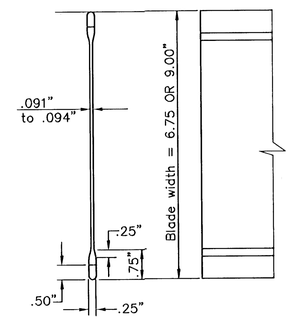


*STREET NAME SIGN*

*BLADE DETAILS*

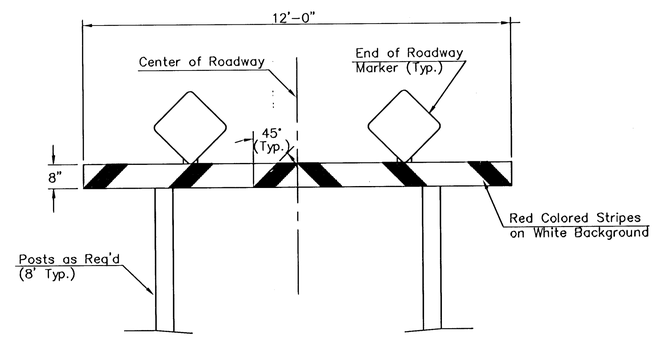


*TYPE I BARRICADE DETAIL W/ E.O.R. MARKERS*

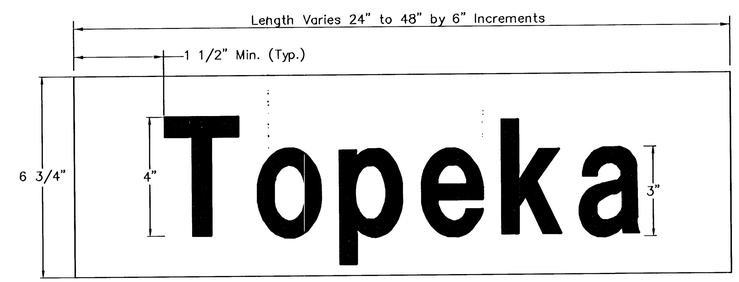


DETAIL A

6 3/4" STANDARD

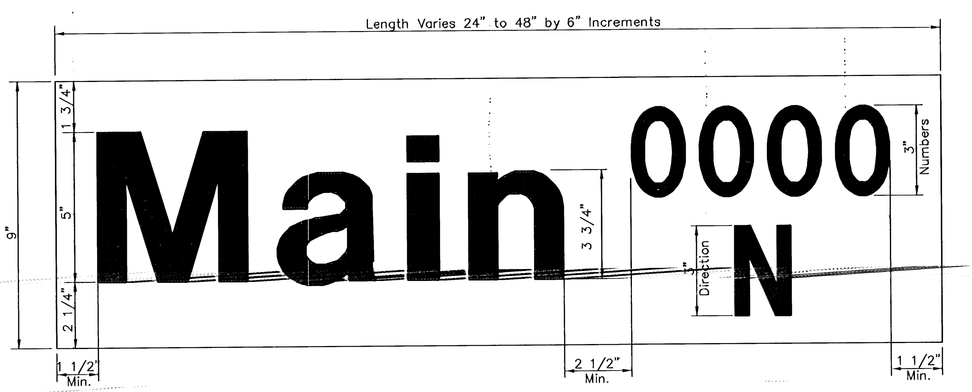


DETAIL B

9" METRO

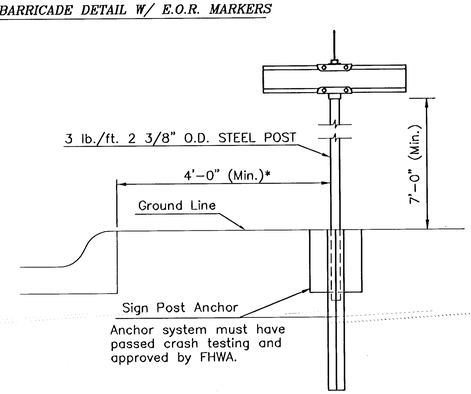


*TYPICAL STREET NAME SIGN MOUNTING INSTALLATION*

*CURB AND GUTTER SECTION*

## *SIGN ASSEMBLY TABLE*

| STATION | OFFSET | SIGN | QUANTITY* |
|---|---|---|---|
| 19+45.00 | 16.5' LT. | R4-7 & OM-1 | 1 |
| 20+00.50 | 23.0' LT. | R4-7 & OM-1 | 1 |
| 20+05.40 | 23.0' RT. | R1-1 | 1 |
| 12+02.63 | 20.3' LT. | S.N.S. | 1 |
| | | | |
| | | | |
| | | |