PROJECT NO.	SHEET NO.	TOTAL SHEETS
472-83376	18	50

SCALE: 1" = 10'

6"x12" W4xW4 WIRE FABRIC REINFORCING SHALL BE PLACED SUCH THAT THE WIRES WITH THE 6" SPACING WILL RUN PARALLEL WITH THE LONGITUDINAL JOINT.

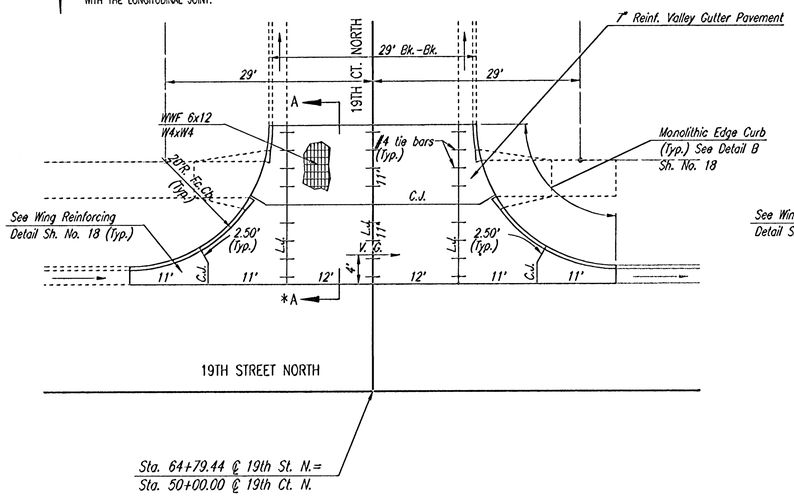

PLAN

REINFORCED VALLEY GUTTER

SCALE: 1" = 10'

6"x12" W4xW4 WIRE FABRIC REINFORCING SHALL BE PLACED SUCH THAT THE WIRES WITH THE 6" SPACING WILL RUN PARALLEL WITH THE LONGITUDINAL JOINT.

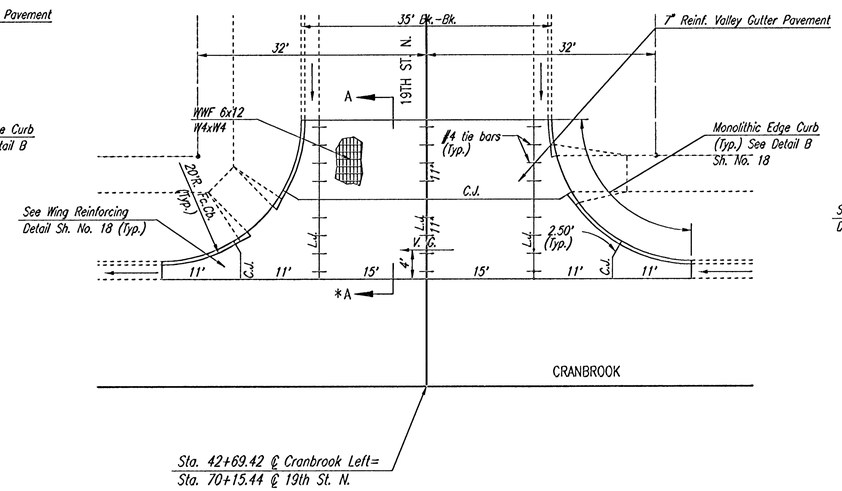

PLAN

REINFORCED VALLEY GUTTER

SCALE: 1" = 10'

6"x12" W4xW4 WIRE FABRIC REINFORCING SHALL BE PLACED SUCH THAT THE WIRES WITH THE 6" SPACING WILL RUN PARALLEL WITH THE LONGITUDINAL JOINT.

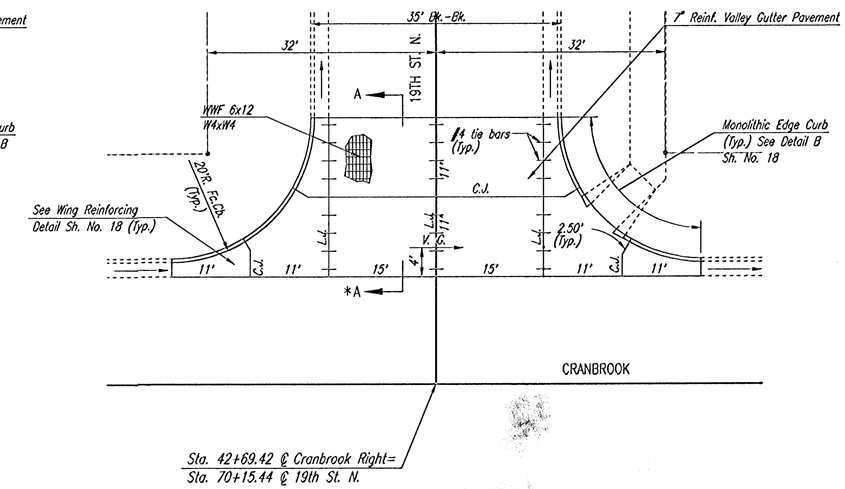

PLAN

REINFORCED VALLEY GUTTER

SCALE: 1" = 10'

6"x12" W4xW4 WIRE FABRIC REINFORCING SHALL BE PLACED SUCH THAT THE WIRES WITH THE 6" SPACING WILL RUN PARALLEL WITH THE LONGITUDINAL JOINT.

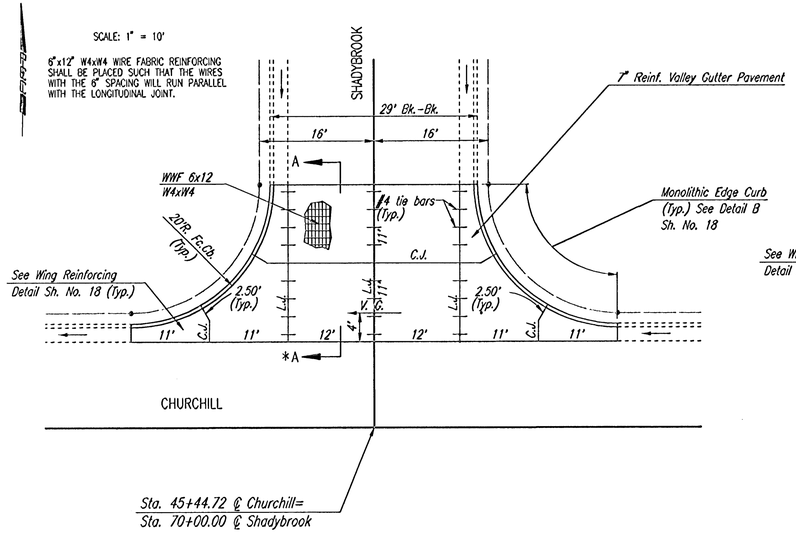

PLAN

REINFORCED VALLEY GUTTER

SCALE: 1" = 10'

6"x12" W4xW4 WIRE FABRIC REINFORCING SHALL BE PLACED SUCH THAT THE WIRES WITH THE 6" SPACING WILL RUN PARALLEL WITH THE LONGITUDINAL JOINT.

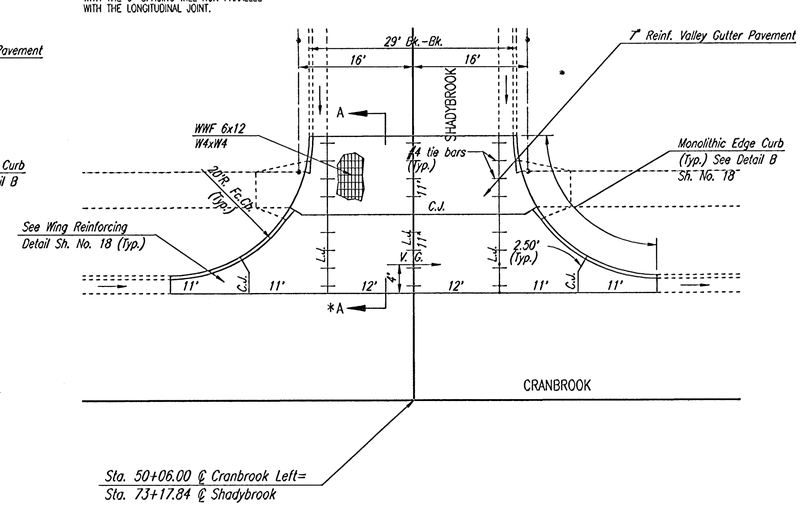

PLAN

REINFORCED VALLEY GUTTER

* SEE SH. NO. 18 FOR SECTION A-A

RECORD DRAWING

24 NOV 03

REMINGTON PLACE - PHASE 2

VALLEY GUTTER PLANS

Professional Engineering Consultants, P.A.
303 S. TOPEKA • WICHITA, KANSAS 67202
316-262-2691 • FAX 316-262-3003

Designed by	BER	Checked by	
Drawn by	DEP	Date DEC., 2002	Job No. 02398

DSWG: RRY OPER: DEP SCALE: 1=10.00
Q:\2002\02398\001\VALGUTPLAN2 12-03-2002 03:11:25 pm