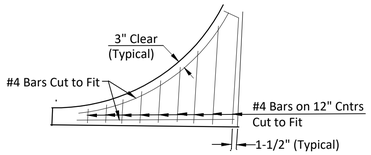

WING REINFORCING DETAIL

SCALE: 1" = 5'

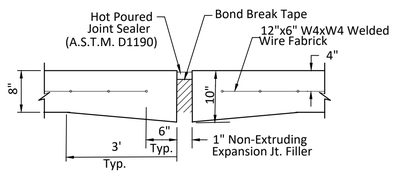

EXPANSION JOINT DETAIL

(E.J.)

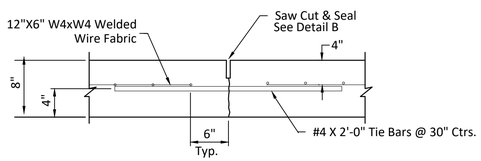

LONGITUDINAL JOINT DETAIL

(L.J.)

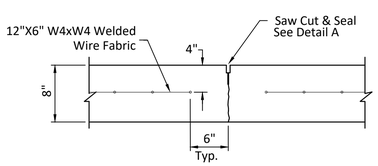

CONTRACTION JOINT DETAIL

(C.J.)

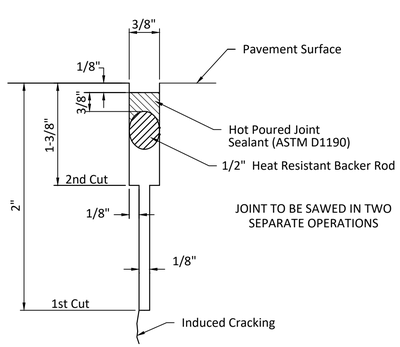

DETAIL A

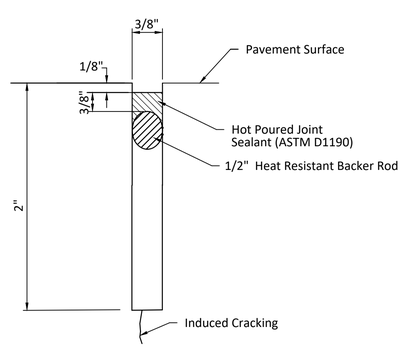

DETAIL B

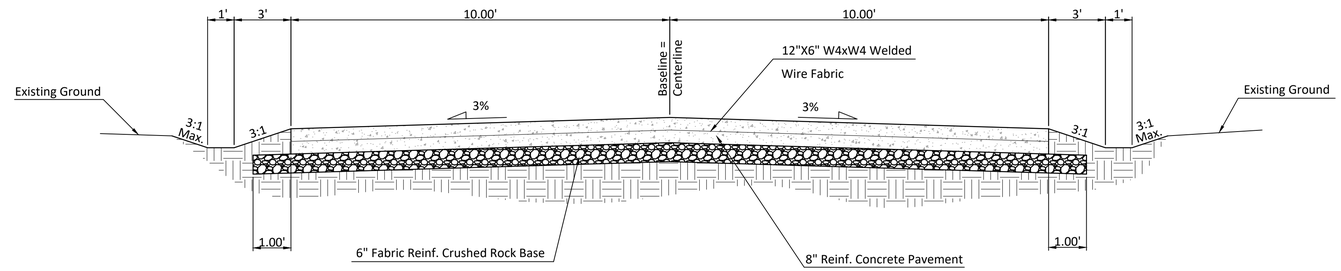

Sta. 0+10.00 to Sta. 5+00.00

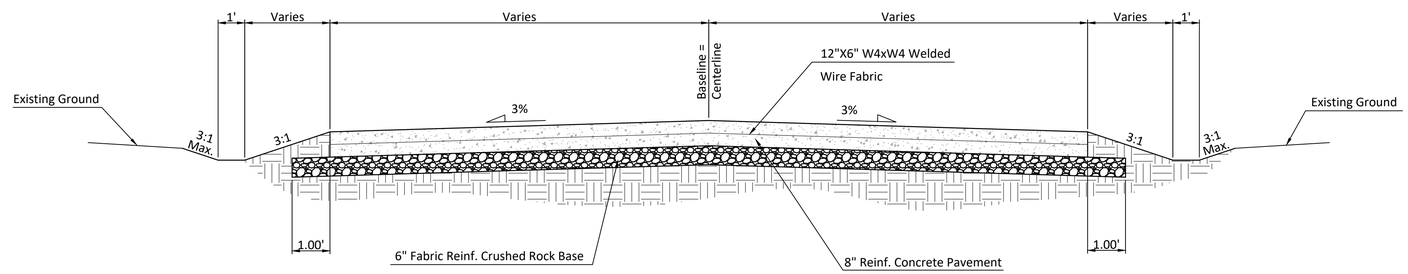

Sta. 5+00.00 to Sta. 5+75.00

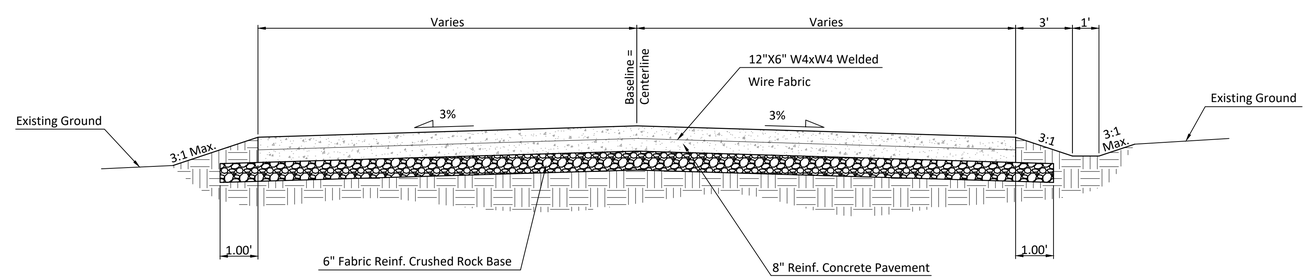

Sta. 5+75.00 to Sta. 8+60.02

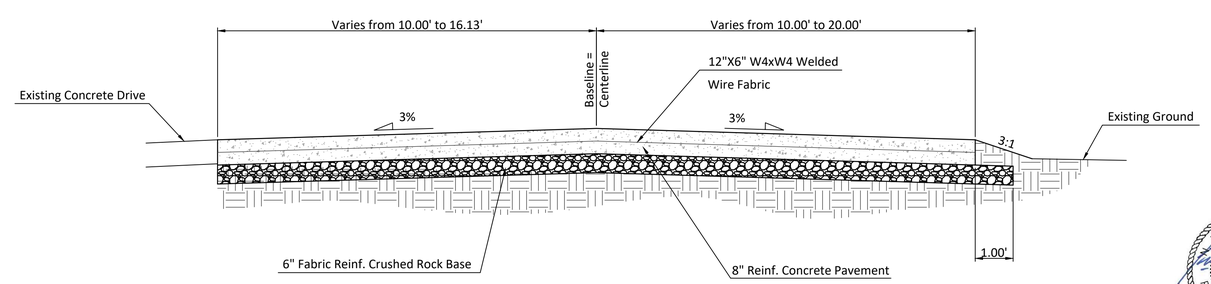

Sta. 8+60.02 to Sta. 9+18.97

BAUGHMAN COMPANY
315 Ellis St. Wichita, KS 67211 316-262-7271
BaughmanCo.com

SANITARY SEWER MAIN
CONCRETE DRIVE
TYPICAL SECTION
VILLAGE CHARTERS 3RD ADDITION

PROJECT NUMBER: 468-005-421
INTERNAL NUMBER: 18-11-E123
DESIGN: TPV
DRAWN: TPV
DATE: June 2020
SHEET 21 OF 28

file: S:\PROJECTS\VILLAGE CHARTERS 3RD ADDITION\18-11-E123\SANITARY\CONCRETE DRIVE