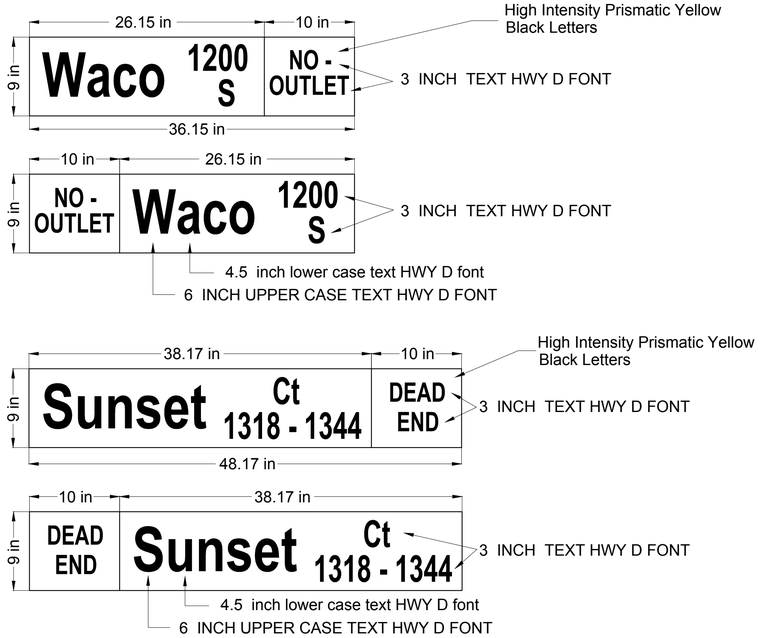

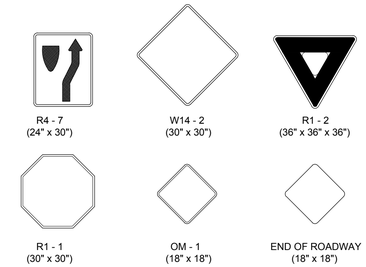

* IN NO CASE SHALL THE SPECIFICATIONS BE LESS THAN REQUIRED BY THE CURRENT MUTCD.

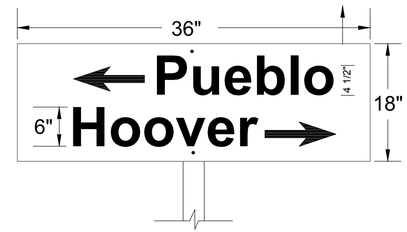

FLAT PLATE STREET NAME SIGN

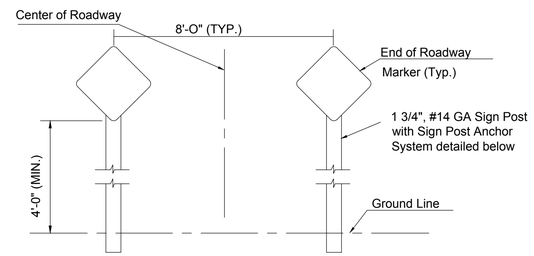

TYPICAL END OF ROADWAY SIGN MOUNTING INSTALLATION

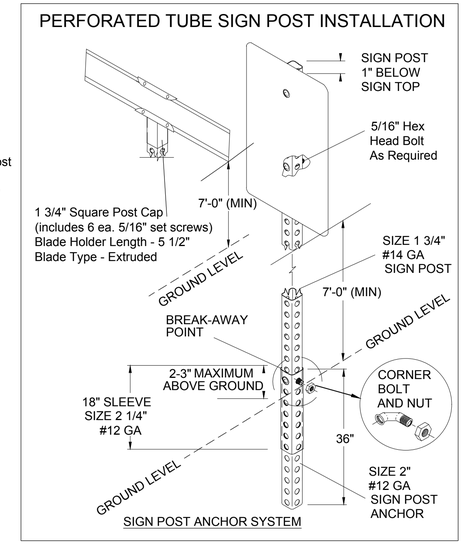

SIGN POST ANCHOR SYSTEM

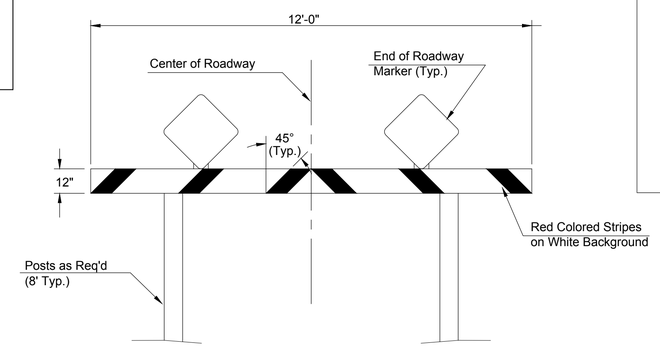

TYPE I BARRICADE DETAIL W/ E.O.R. MARKERS

SIGN ASSEMBLY TABLE

STATION	OFFSET	SIGN	QUANTITY*
4+35.7	26' Lt.	SNS	1
8+91.7	23' Lt.	SNS	1
0+21.8	23' Rt.	SNS	1
TOTAL			

NOTE: REFERENCES BELOW TO "STANDARD SPECIFICATIONS" DENOTE "STANDARD SPECIFICATION FOR STATE ROAD AND BRIDGE CONSTRUCTION EDITION 2015" BY THE KANSAS DEPARTMENT OF TRANSPORTATION.

1. ***FABRICATION AND INSTALLATION OF ALL SIGNS SHALL CONFORM TO THE LATEST EDITION OF THE MUTCD.***

1a. POST ANCHORS: POSTS SHALL BE ANCHORED WITH A YIELDING BASE POST SUPPORT AS DETAILED.

2. POSTS FOR TRAFFIC CONTROL SIGNS: POSTS SHALL BE GALVANIZED AND CONFORM TO THE REQUIREMENTS OF SUBSECTION 1620 OF THE STANDARD SPECIFICATIONS, EXCEPT THAT ALL POSTS SHALL WEIGH 3 LBS./FT. MINIMUM.

3. POSTS FOR STREET NAME SIGNS (SNS): POSTS SHALL BE 9 FEET LONG, CONSTRUCTED FROM #14 GALVANIZED STEEL PIPE AND SHALL BE 1 3/4" SQUARE WEIGHING A MINIMUM OF 3 LBS/FT. POSTS SHALL BE POSITIONED SO THAT THE BOTTOM BLADE IS 7 FEET ABOVE GRADE.

4. POSTS FOR END OF ROADWAY SIGN TO BE 8' LONG AND INSTALLED A MINIMUM OF 4' FROM ROADWAY TO BOTTOM OF SIGN.

5. SIGN BLANKS FOR TRAFFIC CONTROL SIGNS: SIGN BLANKS SHALL BE FABRICATED FROM 0.080" ALUMINUM ALLOY 6063-T6 CONFORMING TO THE REQUIREMENTS OF SUBSECTION 1627 OF THE STANDARD SPECIFICATIONS.

6. SIGN BLADES FOR STREET NAME SIGNS: EXTRUDED ALUMINUM BLADES SHALL BE ALUMINUM ALLOY CONFORMING TO 6063-T6 OR 5052-H38 (ASTM SPECIFICATION B221, LATEST ISSUE). BLADES SHALL HAVE AN ALODINE OR PHOSPHATE ETCHED FINISH. BLADES SHALL HAVE SQUARE CORNERS AND NO HOLES.
MINIMUM BLADE LENGTH SHALL BE 24". MAXIMUM BLADE LENGTH SHALL BE 48". LENGTH VARIES BY INCREMENTS OF 6".
BLADES BEARING THE STREET NAMES SHALL BE FIRMLY ATTACHED TO THE MOUNTING BRACKETS USING ALLEN-TYPE CONICAL SET SCREWS. THE BLADES SHALL BE ORIENTED PARALLEL TO THE STREET.

7. MOUNTING BRACKETS FOR SIGNS: DIE-CAST ALUMINUM BRACKETS SHALL BE ALUMINUM ALLOY 360 HAVING A TENSILE STRENGTH OF 44,000 PSI. THE BRACKETS SHALL BE SMOOTHLY FINISHED FREE OF PITS, BURRS, AND FLAWS. EACH BRACKET SHALL BE TAPPED AND DRILLED FOR 5/16" ZINC-PLATED ALLEN-TYPE SET SCREWS HAVING SELF-LOCKING SAW-TOOTH ENDS.

8. FASTENERS: ALL STEEL FASTENERS FOR TRAFFIC CONTROL SIGNS SHALL BE GALVANIZED AND SHALL CONFORM TO THE REQUIREMENTS OF SUBSECTION 1614 OF THE STANDARD SPECIFICATIONS.

9. REFLECTIVE SHEETING: REFLECTIVE SHEETING SHALL BE A MINIMUM OF HIGH INTENSITY PRISMATIC.

10. PROCESS INK: ALL PROCESS INK SHALL CONFORM TO THE REQUIREMENTS OF SUBSECTION 2202 OF THE STANDARD SPECIFICATIONS.

11. DETAILS - SNS: THE REFLECTIVE SHEETING FOR THE 9" STANDARD SIZE SNS IS TO BE THE HIGHWAY GREEN BACKGOUND WITH SILVER-WHITE #2 COPY WITH 6" UPPER CASE AND 4 1/2" LOWER CASE PRIMARY COPY AND SUFFIX COPY. BOTH SERIES "C". FACES TO TRIM TO A 8 1/2". (SEE DETAIL A.)
THE REFLECTIVE SHEETING FOR THE 9" METRO SIZE SNS IS TO BE THE HIGHWAY GREEN BACKGROUND WITH SILVERWHITE #2 COPY WITH 6" UPPER CASE AND 4 1/2" LOWER CASE PRIMARY COPY AND SUFFIX COPY, BOTH SERIES "C". THE CARDINAL DIRECTION CENTERED DIRECTLY BELOW THE BLOCK NUMBER SHALL BE AN UPPER CASE, 3" SERIES "C" LETTER. FACES TO TRIM TO A 8 1/2" WIDTH. (SEE DETAIL B.)
FOR CUL-DE-SAC STREETS, A 9" METRO SIZE BLADE SHALL BE USED WITH THE BLOCK NUMBERS DISPLAYED BENEATH THE STREET NAME.
IF BLOCK NUMBERS ARE NOT SHOWN ON THE PLANS THE CONTRACTOR SHALL CONTACT THE TRAFFIC ENGINEER AT 268-4501 PRIOR TO MANUFACTURING THE SIGN.
SHOP DRAWINGS OF LAYOUT FOR SNS SHALL BE SUBMITTED TO THE TRAFFIC ENGINEERING DIVISION OF THE CITY OF WICHITA FOR APPROVAL PRIOR TO FABRICATION. THE FINISHED SIGNS AS SUPPLIED SHALL BE OF GOOD APPEARANCE, FREE FROM RAGGED EDGES, CRACKS SCALES OR BLISTERS AND SHALL BE CLEAN-CUT. SIGNS SHALL BE PACKED IN SUCH MANNER AS TO PREVENT DAMAGE OR DEFACEMENT DURING SHIPMENT OR STORAGE.

12. PERMANENT TRAFFIC CONTROL AND SNS: PERMANENT TRAFFIC CONTROL AND SNS SHALL BE MEASURED AND PAID FOR AT THE LUMP SUM PRICE FOR SIGNING. THE PAYMENT AS SET FORTH ABOVE SHALL BE CONSIDERED FULL COMPENSATION FOR ALL EXCAVATION, BACKFILLING. POSTS, ANCHORS, FASTENERS, MATERIALS, LABOR, TOOLS AND INCIDENTALS NECESSARY TO COMPLETE THIS WORK.

DETAIL A
9" STANDARD

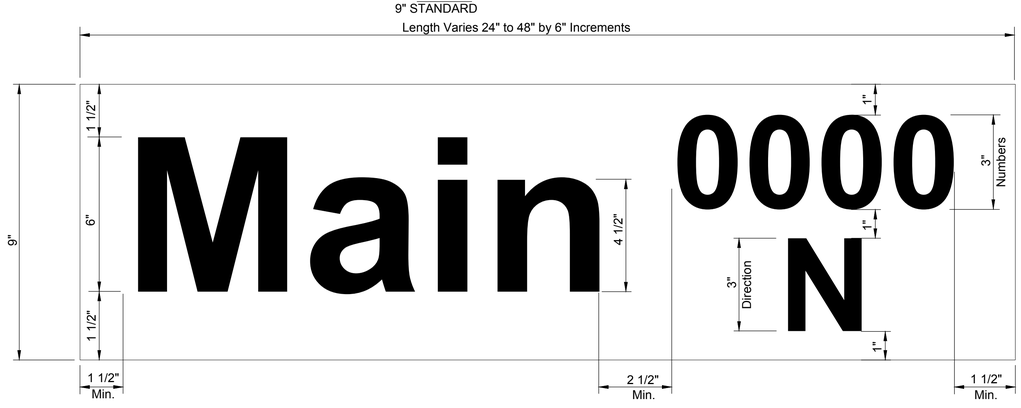

DETAIL B
9" METRO

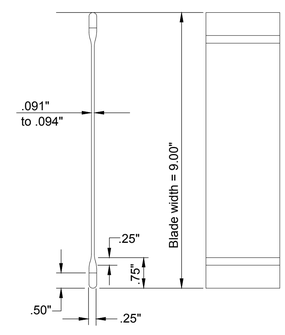

STREET NAME SIGN
BLADE DETAILS

STREET NAME	NO. BLADES REQ'D	
	9" STD.	9" METRO
Bradford	1	
Dalton	2	
Capri	2	
Capri Ct (____-____)		1

Contact City of Wichita Traffic Dept. for street sign numbers.

REVISED: December 2018 | TM | Updated Edition year and Subsection Number in Notes

CITY OF WICHITA
PUBLIC WORKS & UTILITIES ENGINEERING DIVISION

SIGN DETAILS

TRAFFIC ENGINEER
Michael Armour, PE

PROJECT NUMBER	OCA NUMBER	DATE

CITY ENGINEER'S OFFICE
CITY HALL - SEVENTH FLOOR
455 NORTH MAIN STREET
WICHITA, KANSAS 67202-1620
(316) 268-4501

SHEET
5 of 36

TR-106