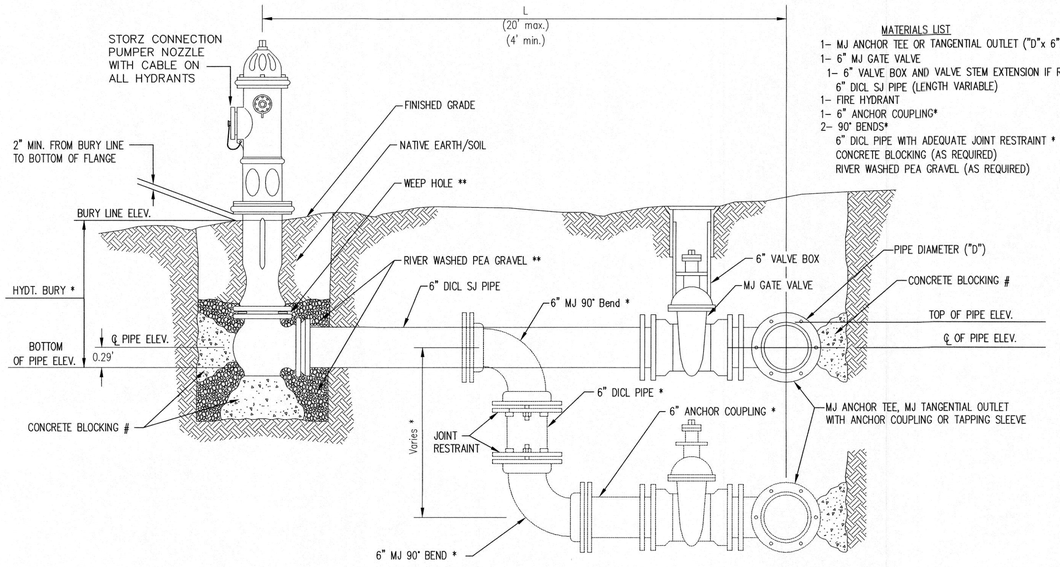

MATERIALS LIST
1– MJ ANCHOR TEE OR TANGENTIAL OUTLET ("D"x 6")
1– 6" MJ GATE VALVE
1– 6" VALVE BOX AND VALVE STEM EXTENSION IF REQUIRED *
6" DICL SJ PIPE (LENGTH VARIABLE)
1– FIRE HYDRANT
1– 6" ANCHOR COUPLING*
2– 90° BENDS*
6" DICL PIPE WITH ADEQUATE JOINT RESTRAINT *
CONCRETE BLOCKING (AS REQUIRED)
RIVER WASHED PEA GRAVEL (AS REQUIRED)

* IF THE REQUIRED HYDRANT BURY IS IN EXCESS OF 5', BUT LESS THAN 7', CONTRACTOR SHALL USE STANDARD 5' HYDRANT BURY AND HYDRANT BARREL EXTENSIONS AS NECESSARY. IF THE REQUIRED HYDRANT BURY IS GREATER THAN 7', CONTRACTOR SHALL USE 5' HYDRANT BURY, 2–MJ 90° BENDS, 6" ANCHOR COUPLING AND 6" DICL PIPE AS NECESSARY FOR VERTICAL ADJUSTMENT. THE CONTRACTOR SHALL PROVIDE ADEQUATE THRUST BLOCKING AT HYDRANT AND MEGALUGS, OR SIMILAR RESTRAINT BETWEEN 90° BENDS TO SECURE ALL FITTINGS DURING TESTING AND OPERATION. THE CONTRACTOR SHALL PROVIDE A VALVE STEM EXTENSION PER DETAIL THIS SHEET.

** CAUTION: WEEP HOLES TO BE KEPT CLEAR DURING CONSTRUCTION AND BACKFILL. CONCRETE FOR THRUST BLOCKING SHALL NOT OBSTRUCT WEEP HOLES. PLACE 1 CUBIC FOOT OF RIVER WASHED PEA GRAVEL AROUND EACH WEEP HOLE.

\# CONCRETE THRUST BLOCKING SHALL BE KEPT CLEAR OF BOLTS, NUTS, AND MJ ACCESSORIES.

FIRE HYDRANT ASSEMBLY

PER CITY OF WICHITA SPECIFICATIONS

FIRE HYDRANTS REQUIRED					
LINE	STATION	BURY LINE ELEVATION	TOP OF PIPE ELEVATION	FIRE HYDRANT BURY REQUIRED*	VALVE STEM EXT. REQUIRED (ft)*
1	4+09.79	1358.55	1354.70	4.50	-
2	8+12.00	1358.15	1354.30	4.50	-

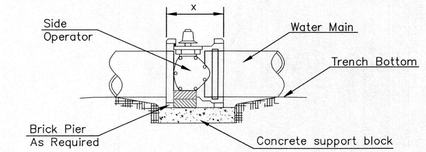

NOTES

1. This detail covers Butterfly Valve installation, inclusive, regardless of type of pipe or joint used. 24" and larger lines to be detailed on plans.
2. 6" Valve Box and Cover required per City of Wichita Std. Specifications.
3. Conc. Support Block to be full width of trench.

CONCRETE SUPPORT BLOCKING FOR BUTTERFLY VALVE INSTALLATION

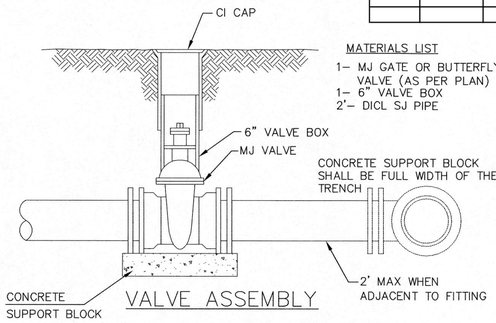

MATERIALS LIST
1– MJ GATE OR BUTTERFLY VALVE (AS PER PLAN)
1– 6" VALVE BOX
2'– DICL SJ PIPE

VALVE ASSEMBLY

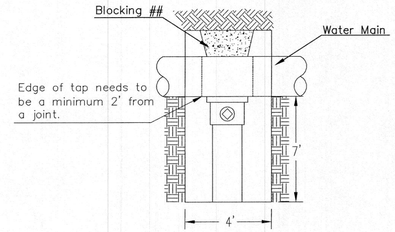

CITY TAP

When the City of Wichita makes tap, blocking is to be done by Contractor

MATERIALS LIST
1–MJ GATE OR BUTTERFLY VALVE (AS PER PLAN)
1–MJ ANCHOR COUPLING (12" OR SMALLER)
1–6" VALVE BOX
CONCRETE SUPPORT BLOCK SHALL BE FULL WIDTH OF THE TRENCH

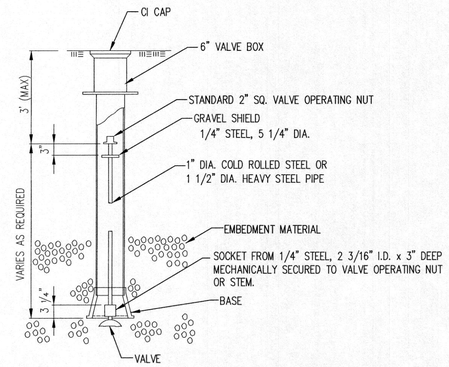

VALVE STEM EXTENSION DETAIL

NOTE: ONE VALVE STEM EXTENSION FOR EACH VALVE BURIED GREATER THAN 5'.

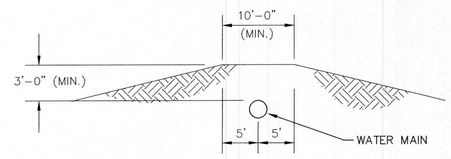

PROTECTIVE FILL DETAIL

MINIMUM PROTECTIVE FILL SHALL BE PROVIDED IN ALL INSTANCES WHERE COVER OVER THE PROP. WATER LINE IS LESS THAN 3'.
(COST SUBSIDIARY TO PIPE INSTALLATION)

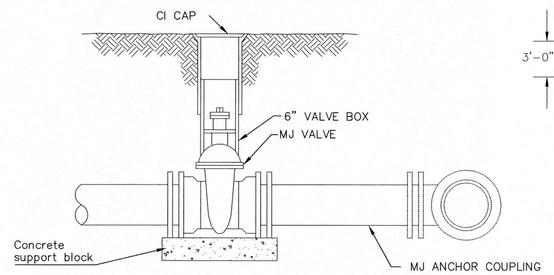

ANCHORED VALVE ASSEMBLY

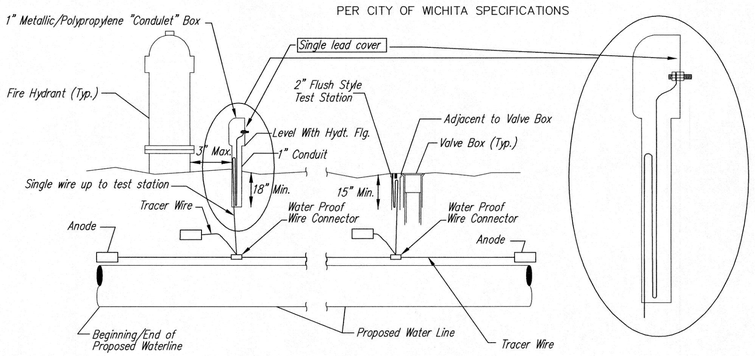

TRACER WIRE

Conductive type pipe locator/tracer wire shall be install to locate all waterline pipe regardless of pipe material. The wire shall extend the entire length of the proposed pipe. The wire shall be taped to the waterline and pulled with the pipe. A waterproof connector shall be used at splice locations. A complete list of approved tracer wire and waterproof connectors can be found on the City of Wichita's website at www.wichita.gov.

WIRE

The tracer wire shall be Blue No. 12 AWG CCS with 45 mil HDPE insulation. To allow for grade adjustment, a minimum of 12" of excess wire shall be coiled at the bottom of the test station for all wires. Wire connectors shall be installed per manufacturer recommendations. Contractor shall attach wire being installed with proposed water main to any tracer wire installed with adjacent waterline projects.

TEST STATIONS

*The test station for fire hydrant application shall be a 1" "condulet" style station as manufactured by AGRA Industries with a removable solid cover having a single lead extending from the face or approved equal. The "conduit" style test station shall be attached to a 1" rigid galvanized conduit with a minimum length of 36" and plastic end bushing. The flush style shall have the word "WATER" stamped or molded into the lid. The test station for valve applications shall be a 2" flush style test station with wire connector on lid. Model # T2PH7B1LP Handley Industries or CD14*TP SnakePit as manufactured by Copperhead Industries or approved equal. The flush style shall have the word "WATER" stamped or molded into the lid. All test stations shall be manufactured using molded blue tops or sufficiently coated with blue enamel paint. The tracer wire and the anode wire shall be install to allow 12" of wire within the test station. The location of all test stations shall be recorded, and shown in the as–built drawings. Flush style test stations shall not be installed in pavement or sidewalk unless approved by the Engineer. Contractor shall extend tracer wire & move flush mount test station to nearest location out of pavement or sidewalk.*

ANODES

The anodes shall be 3 lb. bare zinc or magnesium. The anodes shall be buried at the same elevation as the waterline at each test station. The anodes shall be connected to 12 AWG CCS which shall be extended to the test station.

TRACER WIRE DETAIL

COST IS SUBSIDIARY TO PIPE INSTALLATION

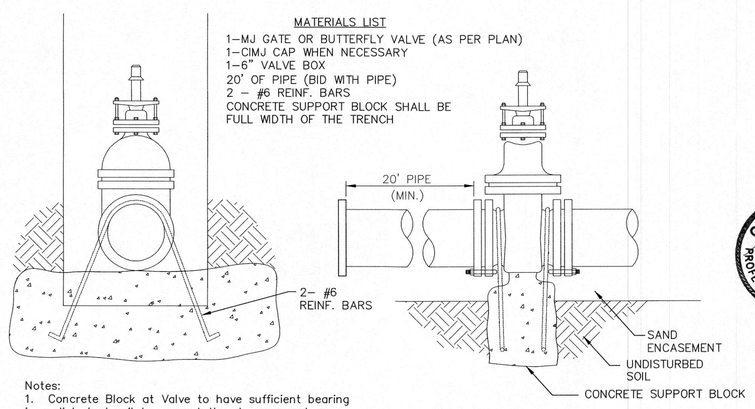

MATERIALS LIST
1–MJ GATE OR BUTTERFLY VALVE (AS PER PLAN)
1–CIMJ CAP WHEN NECESSARY
1–6" VALVE BOX
20' OF PIPE (BID WITH PIPE)
2 – #6 REINF. BARS
CONCRETE SUPPORT BLOCK SHALL BE FULL WIDTH OF THE TRENCH

Notes:

1. Concrete Block at Valve to have sufficient bearing in undisturbed soil to prevent thrust movement as shown in table at right. Field Engineer to determine thrust loading of undisturbed soil and final size of thrust block.
2. The thrust block shall be constructed such that bolts, nuts, and other MJ accessories are kept clear of concrete.
3. All valves at dead ends and at other locations as called out on the plans shall be blocked as shown here.

THRUST AT VALVES	
VALVE	THRUST AT 150 #/in²
4"	1809 lbs.
6"	4245 lbs.
8"	7540 lbs.
12"	16965 lbs.

ANCHORED VALVE ASSEMBLY, SPECIAL

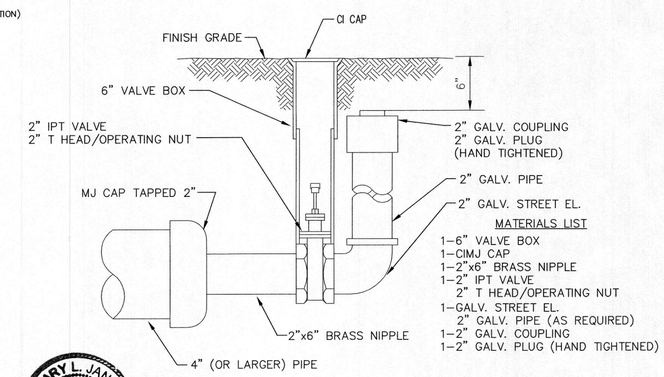

MATERIALS LIST
1–6" VALVE BOX
1–CIMJ CAP
1–2"x6" BRASS NIPPLE
1–2" IPT VALVE
2" T HEAD/OPERATING NUT
1–GALV. STREET EL.
2" GALV. PIPE (AS REQUIRED)
1–2" GALV. COUPLING
1–2" GALV. PLUG (HAND TIGHTENED)

2" BLOWOFF ASSEMBLY

GARY L. JANZEN LICENSED 16294 KANSAS PROFESSIONAL ENGINEER
10/27/16

REVISED: OCTOBER 2016

CITY OF WICHITA
PUBLIC WORKS & UTILITIES ENGINEERING DIVISION

STANDARD WATER ASSEMBLY DETAIL

CITY ENGINEER
GARY JANZEN, P.E.

PROJECT NUMBER	OCA NUMBER	DATE

CITY ENGINEER'S OFFICE
CITY HALL - SEVENTH FLOOR
455 NORTH MAIN STREET
WICHITA, KANSAS 67202-1620
(316) 268-4501

SHEET
2 of 15

WL-101