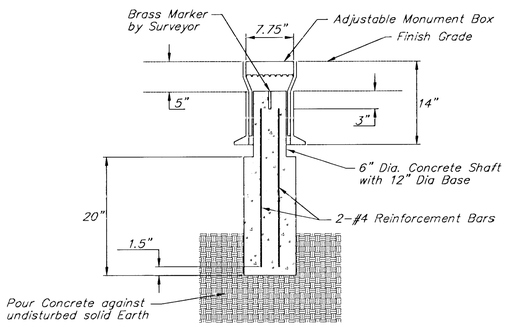

MONUMENT BOX

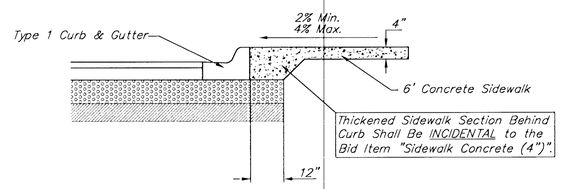

SIDEWALK DETAIL ADJACENT TO CURB

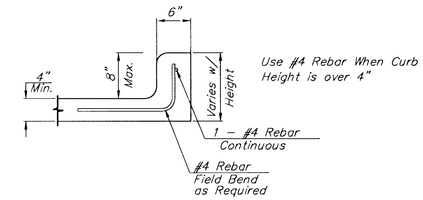

PROTECTION CURB DETAIL

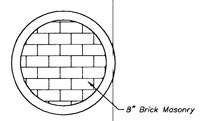

1. Mortar used in pipe plug construction shall be in accordance with standard specifications.
2. All brick used in pipe plug construction shall meet Grade ASTM C32 for MM and MS.
3. All materials and labor required for pipe plug construction shall be SUBSIDIARY to the Project.

PIPE PLUG DETAIL

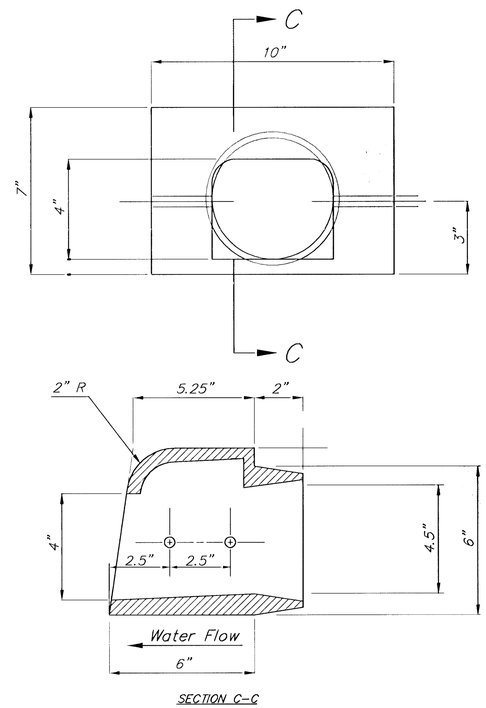

DEETER CURB DRAIN

ORDER #2449 - 6 Curb (Out Flow)
(OR APPROVED EQUAL)
EST. WT. = 40 lbs.

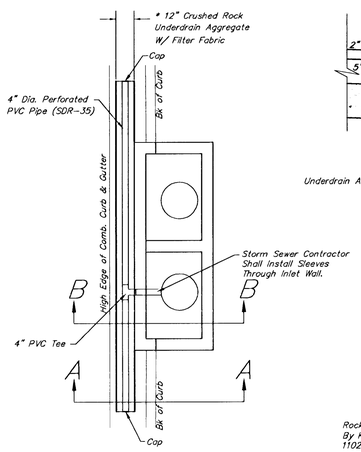

PLAN
NOT TO SCALE

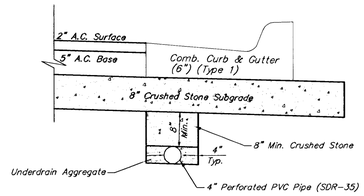

(Min. 16 Perforations Per Foot @ .25" Dia.)
Perforations To Be on Bottom Half

SECTION A-A
NOT TO SCALE

* UNDERDRAIN AGGREGATE
Percent of Aggregate Retained

1"	0
.75"	0 to 10
.40"	45 to 80
#4	90 to 100
#8	95 to 100

Rock Quality Shall Conform To The Requirements Specified By K.D.O.T. 1990 Edition Standard Specification Subsection 1102 For Durability Class I.

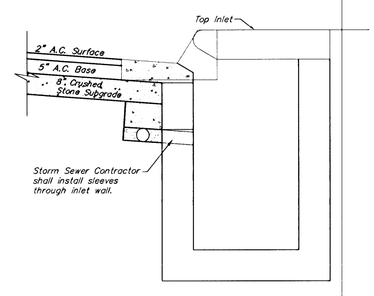

(Min. 16 Perforations Per Lin. Ft. @ .25" Dia.)
Perforations To Be on Bottom Half

SECTION B-B
NOT TO SCALE

NOTE: Place 4" Perforated PVC Pipe at all drainage sump locations.
Storm Sewer Contractor shall install sleeves through inlet wall.
Cost of Underdrain System to be INCIDENTAL to the Bid Item "8" Reinf. Crushed Rock Base".
Inlet Type May Vary From That Shown.

PAVEMENT UNDERDRAIN DETAIL
TYPE-I INLET
NOT TO SCALE

PROJECT NUMBER	SHEET NAME	ENGINEERING DIRECTORY
472-76-245-83324	Misc	F:\Eng\Hydraulic\Details

DESIGN	DRAWN	APPROVED	DATE	SCALE	BAUGHMAN NO
JFB	STAFF	JFB	Sept. 2002	None	99-09-E450

CAPITAL IMPROVEMENT PROJECT
MISCELLANEOUS DETAILS
HYDRAULIC AVENUE PAVING - 47TH STREET SOUTH TO MACARTHUR ROAD

BAUGHMAN COMPANY, P.A.
ENGINEERING, SURVEYING, & PLANNING
316-262-7271 * 315 ELLIS * WICHITA, KANSAS 67211

SHEET 10 OF 102