FHWA REGION NO.	STATE	PROJECT NO.	YEAR	SHEET NO.	TOTAL SHEETS
7	KANSAS	87U-1247-01	1992	27	79

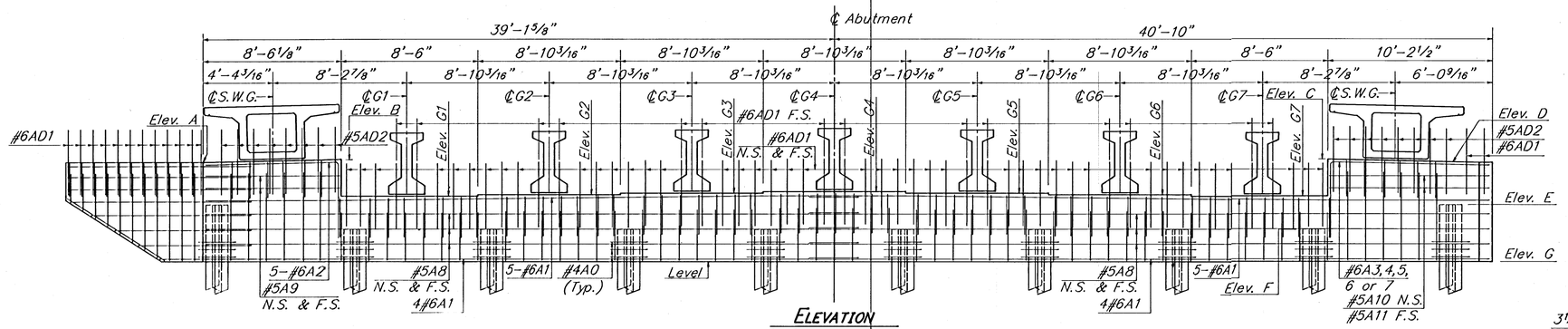

ELEVATION

All dimensions are along ℄ Abut.

See Sheet 43 for Bar List.
See Sheet 43 for Bar Bending Diagrams.
See Sheet 24 for General Notes.

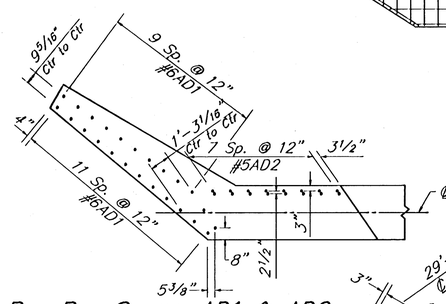

PART PLAN SHOWING AD1 & AD2 BAR SPACING

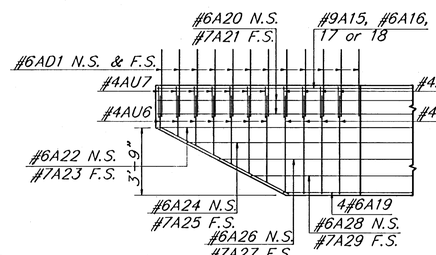

DEVELOPED VIEW OF WING

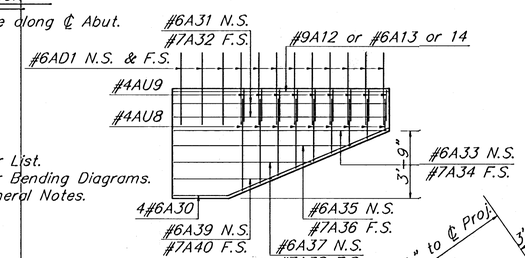

DEVELOPED VIEW OF WING

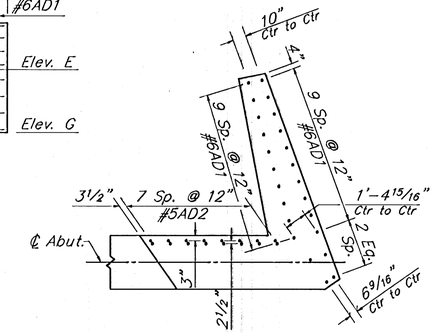

PART PLAN SHOWING AD1 & AD2 BAR SPACING

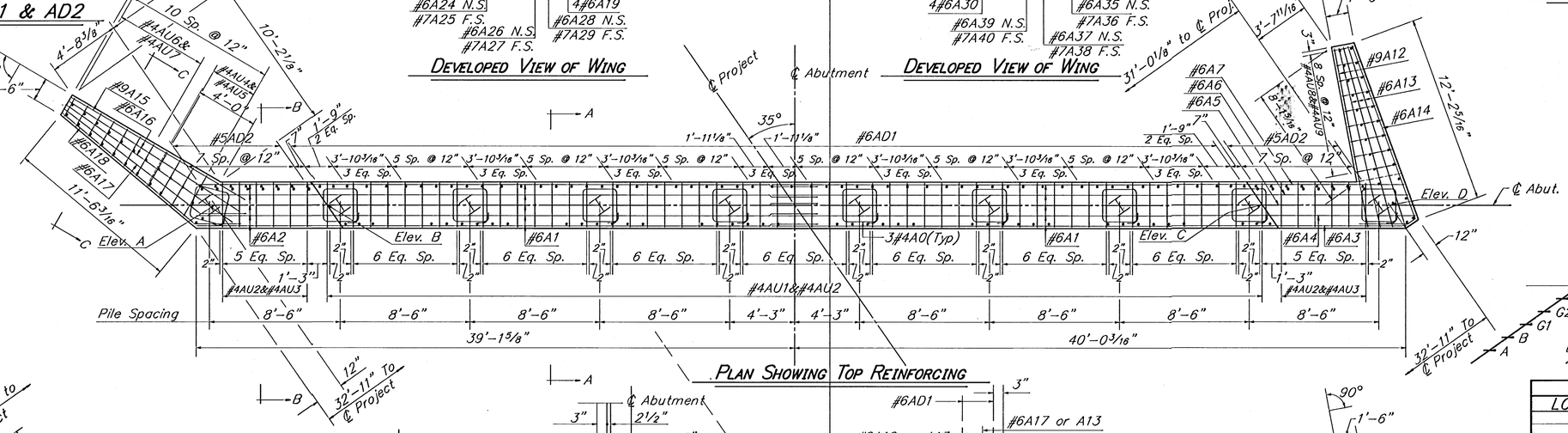

PLAN SHOWING TOP REINFORCING

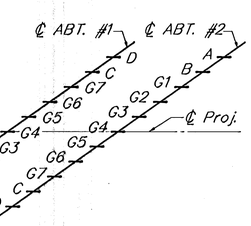

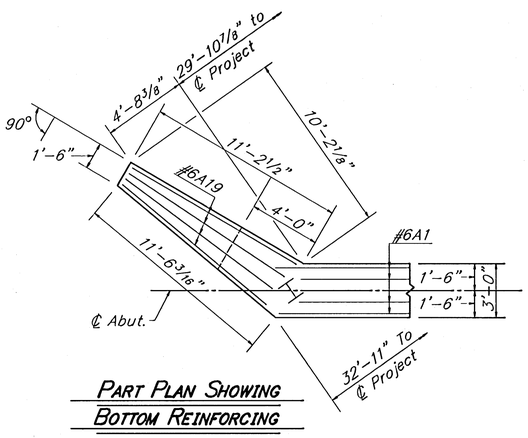

PART PLAN SHOWING BOTTOM REINFORCING

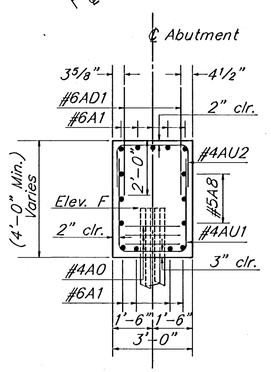

SECTION A-A

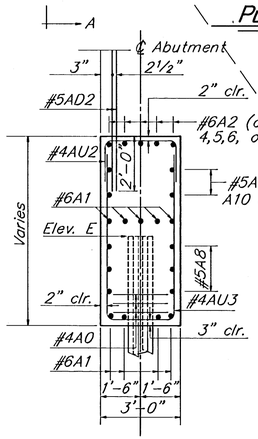

SECTION B-B

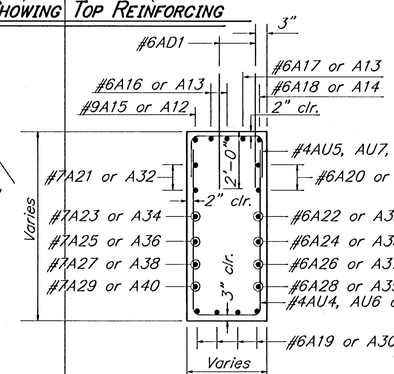

SECTION C-C

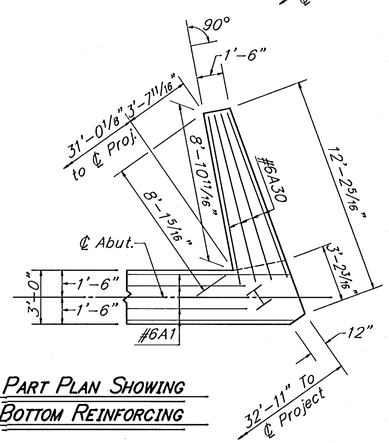

PART PLAN SHOWING BOTTOM REINFORCING

TABLE OF ELEVATIONS	
LOCATION	ELEVATION
A	1300.37
B	1300.51
G1	1298.52
G2	1298.66
G3	1298.80
G4	1298.93
A5	1298.82
G6	1298.70
G7	1298.59
C	1300.59
D	1300.45
E	1297.00 ±3"
F	1296.50
G	1294.52

CITY OF WICHITA

GEORGE WASHINGTON BLVD. BRIDGE OVER GYPSUM CREEK

ABUTMENT DETAILS

CITY OF WICHITA PROJ. NO.: 472-82156

Booker ASSOCIATES INC. OF KANSAS
Wichita Kansas

SCALE	DATE	DWG. NO.
	June, 1992	K9331

SURV. — PLOT CADD — DES. A.H. — DR. M.G.C. — TR. — CKD. R.G. — APP. S.K.B.

\K9331BR\ABUT
SCALE 1"=4'(1/4")