FHWA REGION NO.	STATE	PROJECT NO.	YEAR	SHEET NO.	TOTAL SHEETS
7	KANSAS	87U-1247-01	1992	42	79

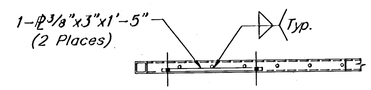

SECTION C-C

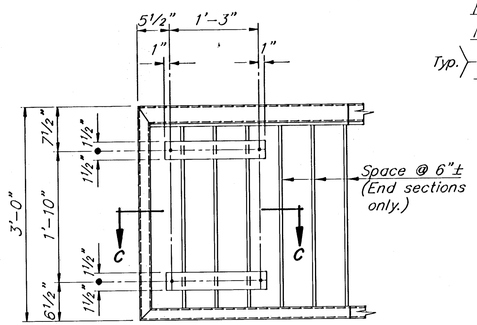

SECTION B-B

Project Marker Mounting @ N.W. and S.E. Quadrants Only

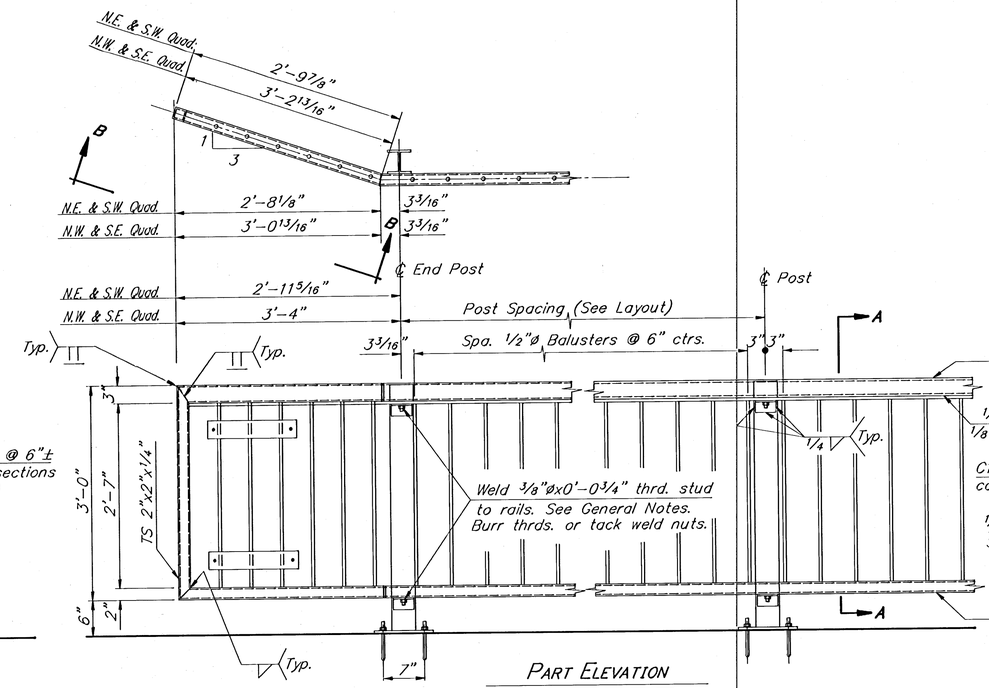

PART ELEVATION

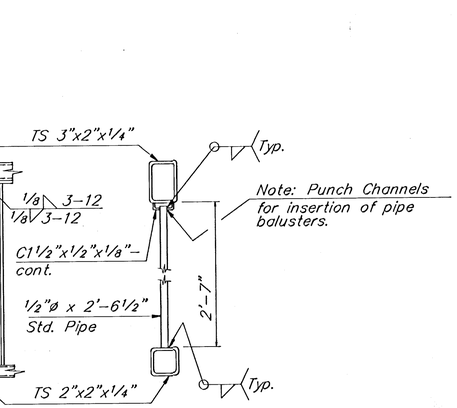

SECTION A-A

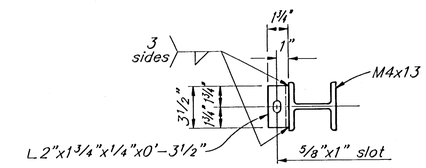

SECTION D-D

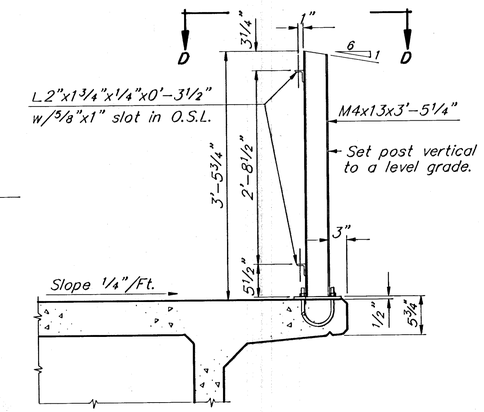

SECTION @ OUTSIDE HANDRAIL

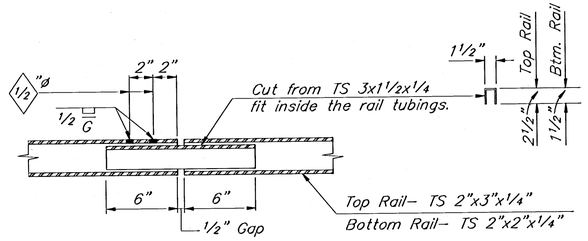

FIXED END SLIDING END

SLIDING JOINT DETAIL

(Elevation)

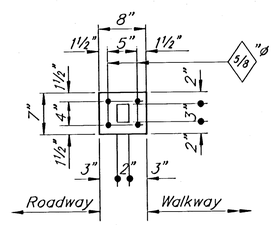

BASE PLATE (INSIDE RAIL)

PL 1/2"x7"x0'-8"

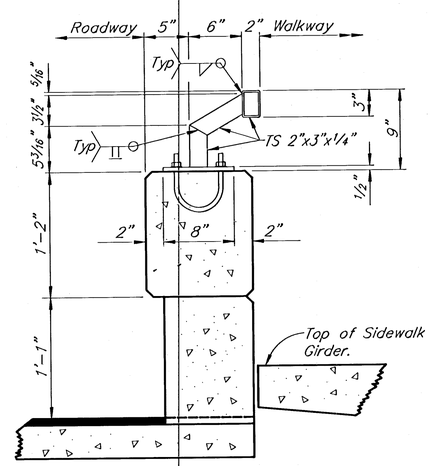

SECTION @ INSIDE RAIL

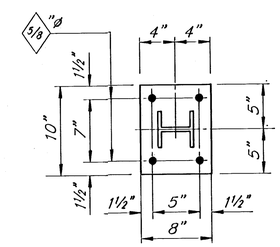

BASE PLATE (OUTSIDE RAIL)

PL 1/2"x8"x0'-10"

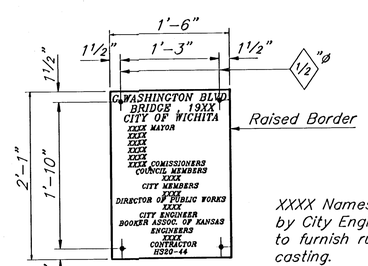

XXXX Names as directed by City Engineer. Contractor to furnish rubbing before casting.

*PROJECT MARKER DETAIL

* Non participating item ~~(to be furnished by City of Wichita and~~ installed by Contractor.)

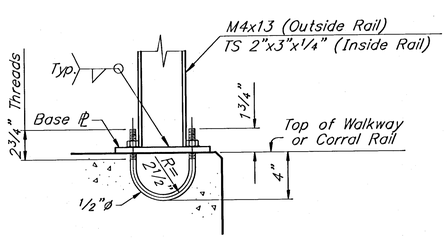

"U" BOLT DETAIL (GALVANIZED)

(196 Req'd. Total Bridge) (w/Nuts & Washers)
(Inside & Outside Rails)

GENERAL NOTES:

Mat'l. Specifications: Plates and Shapes: A709 Gr. 36.
Pipe: A-500 Gr. B
Tube: A-500 Gr. B
U Bolt: A36 (Galv.)

Posts shall be set vertically in the transverse direction perpendicular to the grade longitudinally. All cut edges shall be true and smooth, and free of burrs and ragged breaks.

All metal posts, and rails shall be sandblasted and painted as per K.D.O.T. 1990 std. spec. for inorganic zinc vinyl system. Color selection shall be by the City of Wichita.

All fillet welds shall be 1/4" unless otherwise noted.
All studs shall be welded with stud welding gun.

Shop drawings shall be submitted for approval by the Engineer prior to fabrication.

Handrail shall be paid for as Lin. Ft. measured from ℄ to ℄ of posts.

U-Bolts for the outside rail must be cast in the precast girder flanges. See sheet 35..

U-Bolts for inside rail must be cast in the corral rail.

CITY OF WICHITA

GEORGE WASHINGTON BLVD. BRIDGE OVER GYPSUM CREEK

HANDRAIL DETAILS

CITY OF WICHITA PROJ. NO.: 472-82156

Booker ASSOCIATES INC. OF KANSAS
Wichita Kansas

SCALE — DATE June, 1992 DWG. NO. K9331

SURV. — PLOT CADD — DES. A.H. — DR. B.R. — TR. — CKD. R.G. — APP. S.K.B.

\K9331BR\RAIL
SCALE 1"=1'