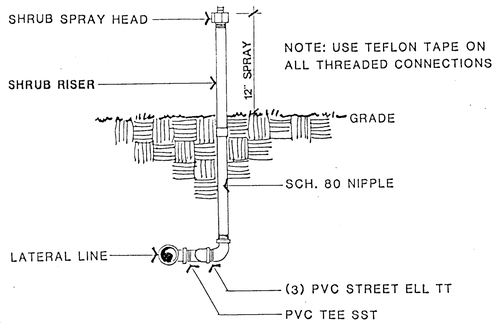

1/81 SHRUB SPRAY HEAD DETAIL

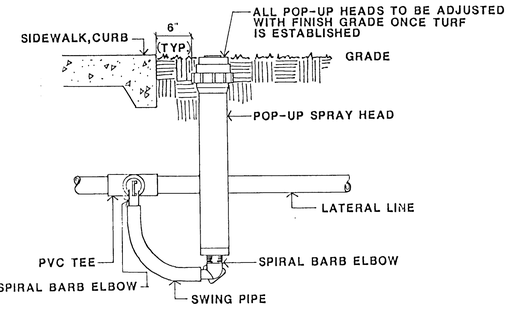

2/81 SPRAY POP-UP DETAIL W/SWING JOINT

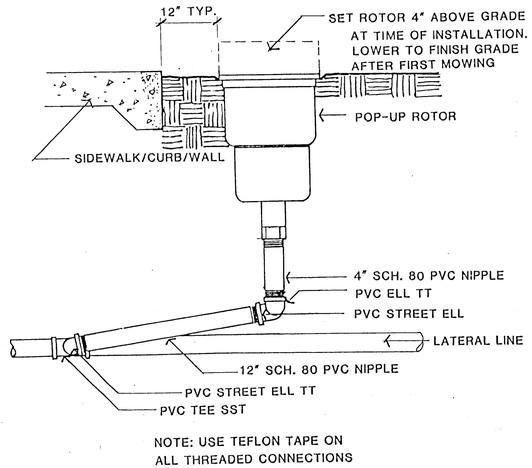

3/81 ROTOR POP-UP DETAIL

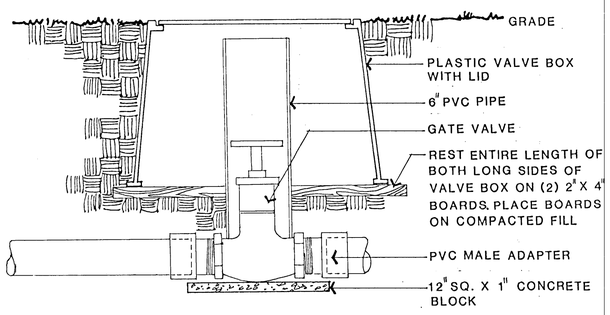

4/81 MAINLINE GATE VALVE DETAIL

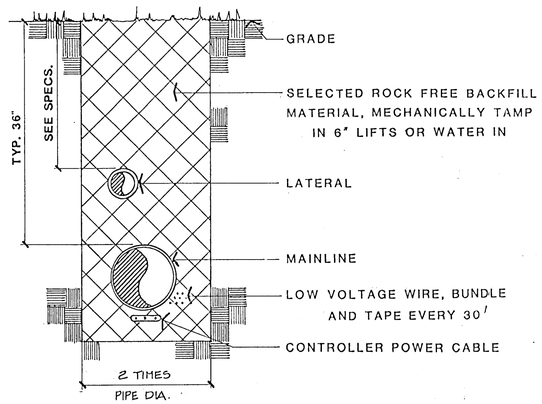

5/81 MAINLINE TRENCH DETAIL

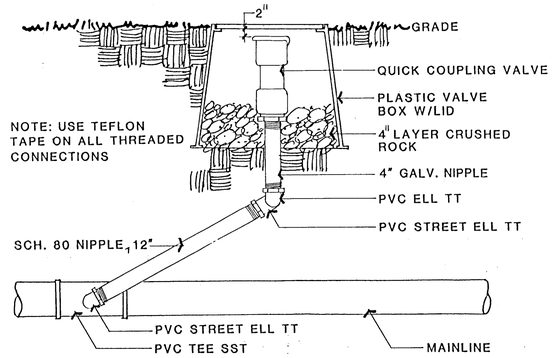

6/81 QUICK COUPLING VALVE DETAIL

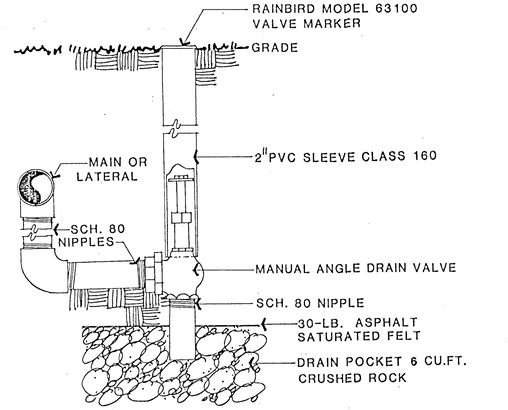

7/81 MANUAL DRAIN VALVE

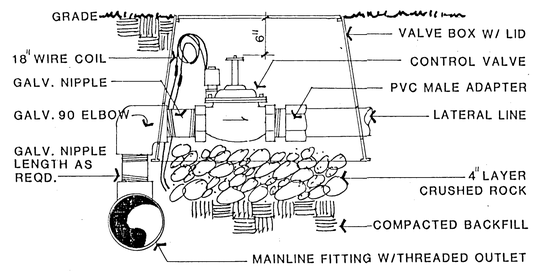

8/81 REMOTE CONTROL VALVE DETAIL

PROJECT NO.	SHEET NO.	TOTAL SHEETS
	81	82

IRRIGATION SYSTEM NOTES

1. All main line piping to be 2 1/2" PVC Class 160 IPS Plastic Pipe with minimum 36" cover as per specifications.
2. Circuit line piping to be PVC Class 160 IPS Plastic Pipe for all sizes except 1" which shall be PVC Class 200 IPS Plastic Pipe. No circuit pipe shall be smaller than 1".
3. All piping shall slope toward drain valves. Install automatic drain valves as specified in all low points in circuit lines. Main lines shall have manual drain valves as specified at all low points. Plans show suggested locations based on topography. Additional drain valves shall be installed as needed.
4. As-built plans shall be prepared by Irrigation Contractor showing all lines, heads, valves, wiring locations and all other pieces of the system.
5. Arc of sprinkler nozzles to be determined based on location of sprinkler within beds. Avoid spraying across sidewalks, into streets or onto structures.
6. No piping shall carry a water velocity greater than 5 FT/SEC. In some cases pipe size greater than remote control valve size may need to be used to bring water flow velocity to required FPS. Follow chart below for velocity guidelines:

G.P.M. FLOW IN PIPE	MINIMUM PIPE SIZE
0 - 17 GPM	1"
18 - 37 GPM	1 1/2"
38 - 60 GPM	2"
61 - 86 GPM	2 1/2"

ENGINEERING DIVISION — CITY OF WICHITA

K-96 LANDSCAPING/BEAUTIFICATION IMPROVEMENTS

IRRIGATION DETAILS

K-96 BYPASS
I-135 TO CITY LIMITS

PDS DESIGN GROUP Wichita, Kansas

MID-KANSAS ENGINEERING CONSULTANTS, P.A.
ENGINEERS
WICHITA, KANSAS

Designed by		Checked by	SMP
Drawn by	CG	Date	4/10/89
		Job No.	3064

Rev. 8/14/89