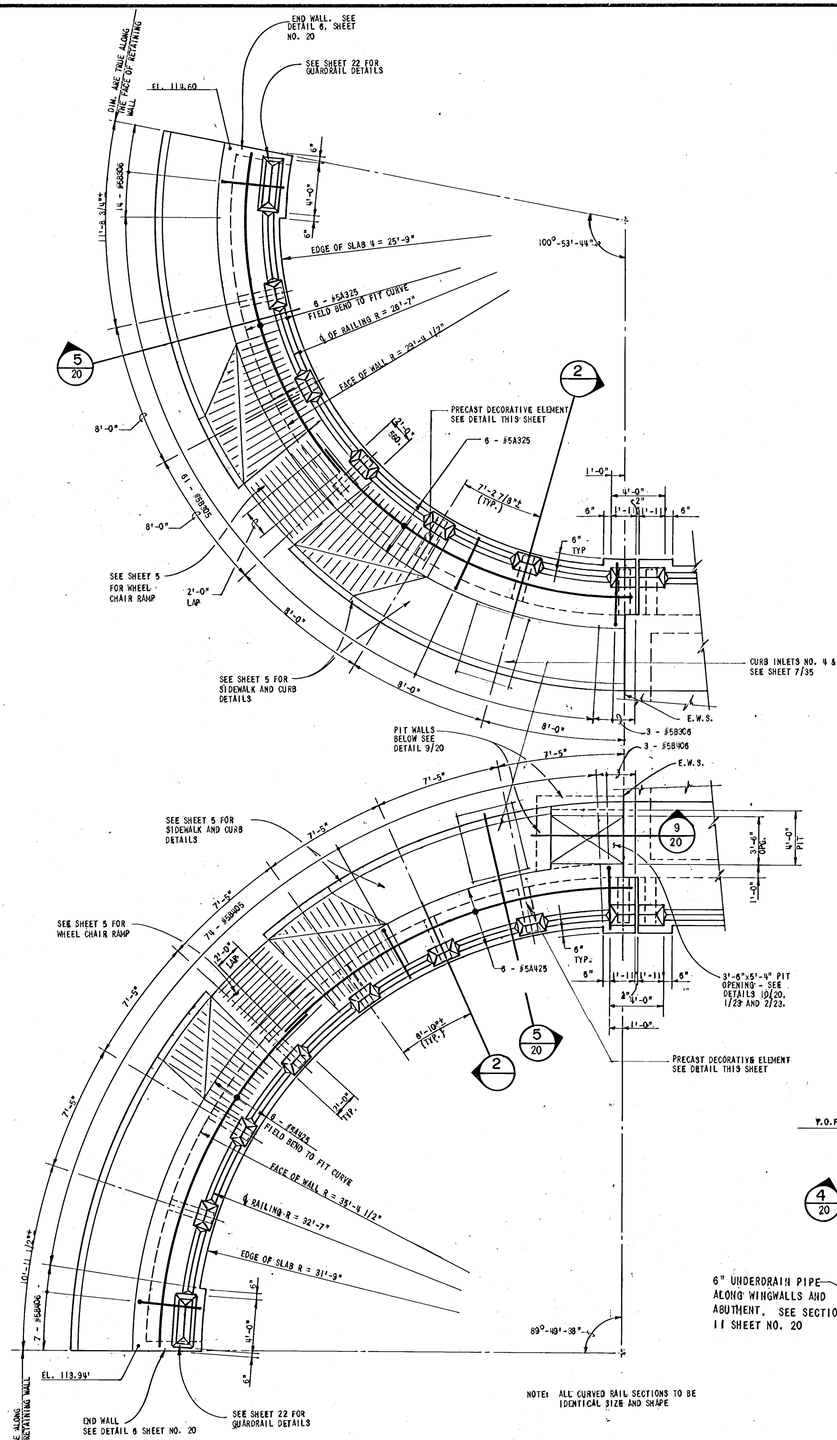

GUARDRAIL PLAN

NOTE: ALL CURVED RAIL SECTIONS TO BE IDENTICAL SIZE AND SHAPE

McLEAN / SENECA NORTH CURB RETURNS

3/16" = 1'-0"

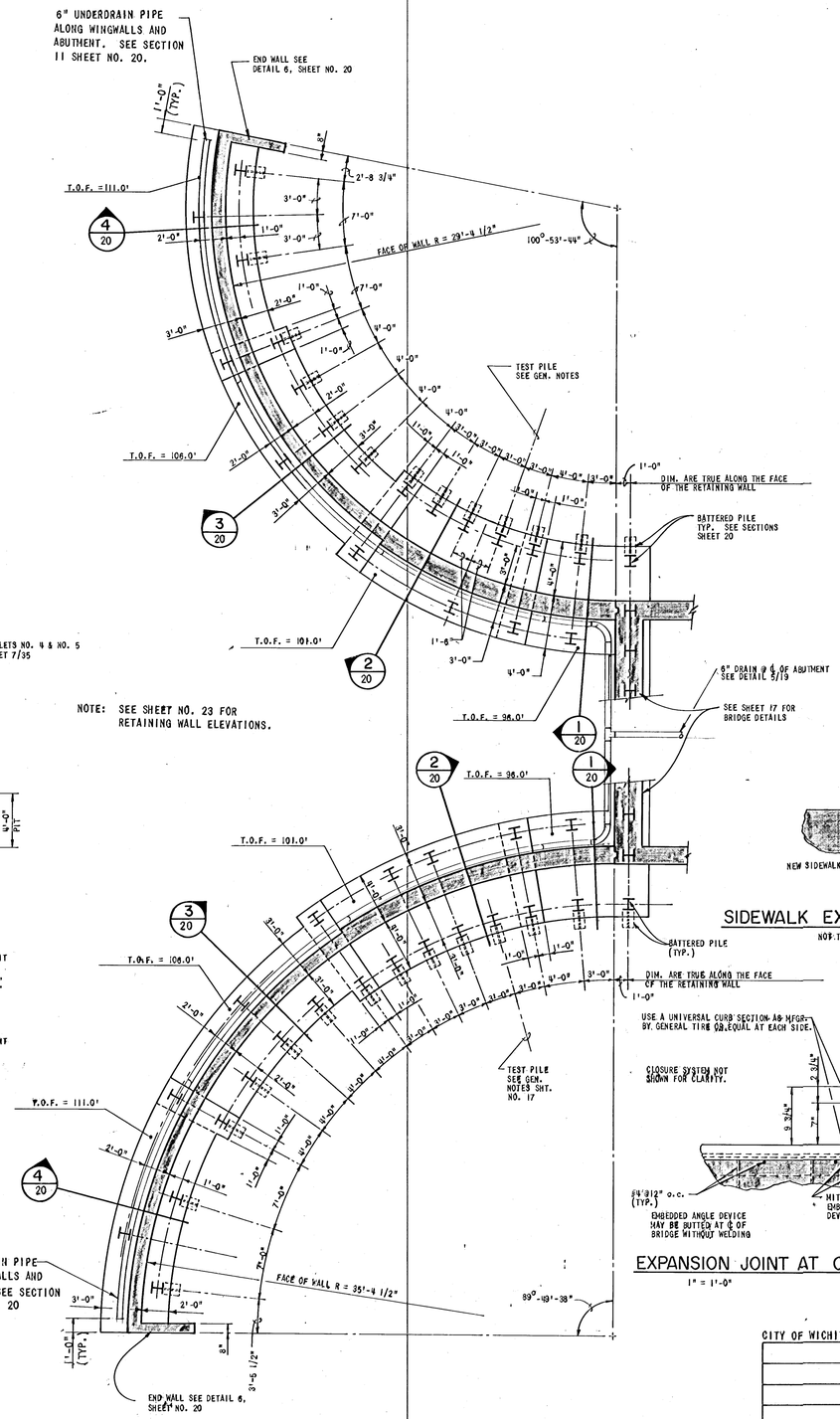

NOTE: SEE SHEET NO. 23 FOR RETAINING WALL ELEVATIONS.

FOOTING PLAN

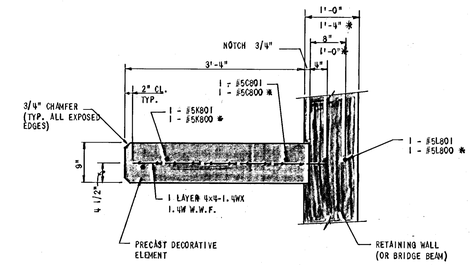

PLAN SECTION 1

3/4" = 1'-0"

* AT BRIDGE BEAMS

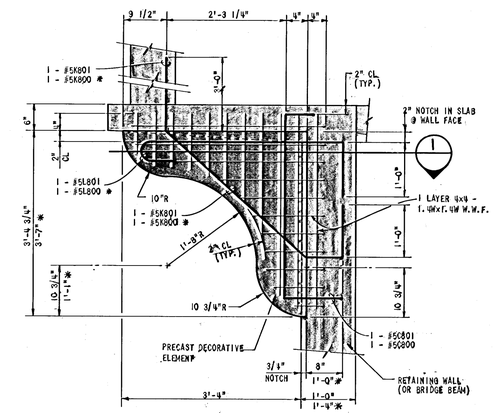

PRECAST DECORATIVE ELEMENT 2

3/4" = 1'-0"

* AT BRIDGE BEAMS

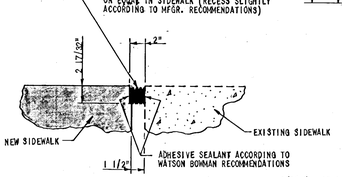

SIDEWALK EXPANSION JOINT 5

NOT TO SCALE

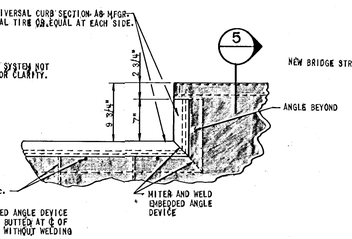

EXPANSION JOINT AT CURB 4

1" = 1'-0"

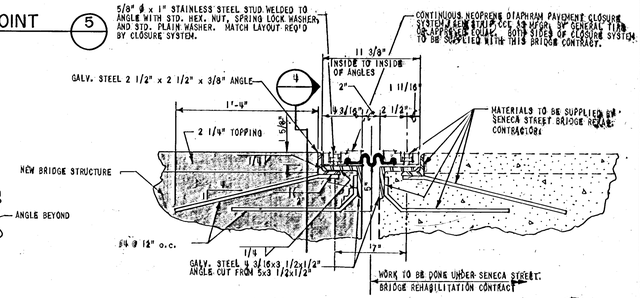

BRIDGE EXPANSION JOINT 3

NOT TO SCALE

CITY OF WICHITA PROJECT NO. 472-76-248-81199-000-000-001

REVISION	DATE	BY

WICHITA, KANSAS

McLEAN AT SENECA INTERSECTION IMPROVEMENTS

GUARDRAIL PLAN AND FOOTING PLAN

DESIGN	DRAWN
GWJ	MEK

GENE W. JOHNSON LICENSED 5200 KANSAS PROFESSIONAL ENGINEER

WILSON & COMPANY ENGINEERS & ARCHITECTS
WICHITA — KANSAS

DATE: OCT. 1983

FILE NO. 82-324A

SHEET NO. 21 OF 37