SHEET NO.	TOTAL SHEETS
C49	131

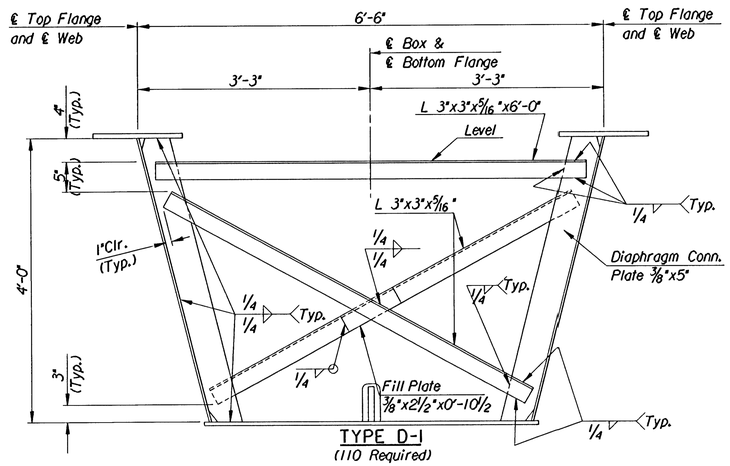

TYPE D-1
(110 Required)

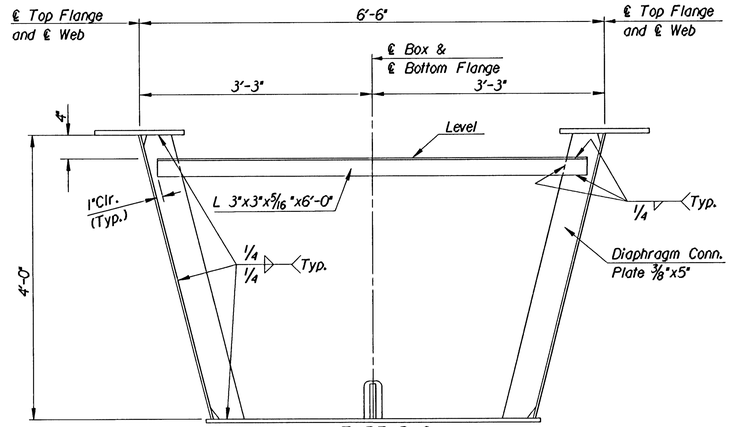

TYPE D-2
(80 Required)

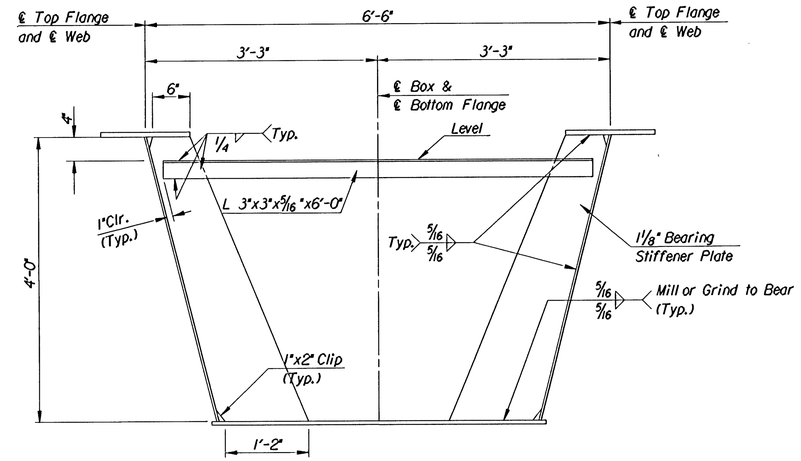

ABUTMENT DIAPHRAGM
(10 Required)

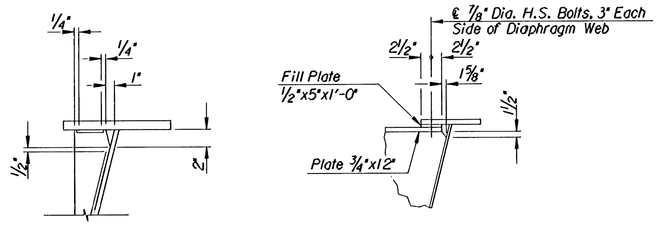

TYPICAL CLIP AND WELD DETAIL

DETAIL A

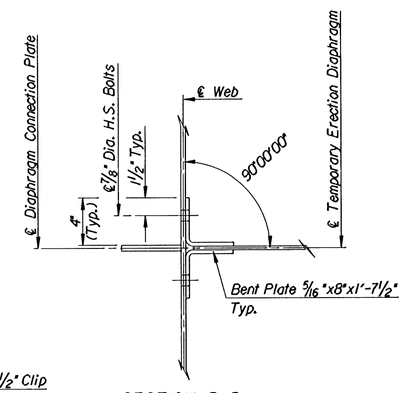

SECTION D-D

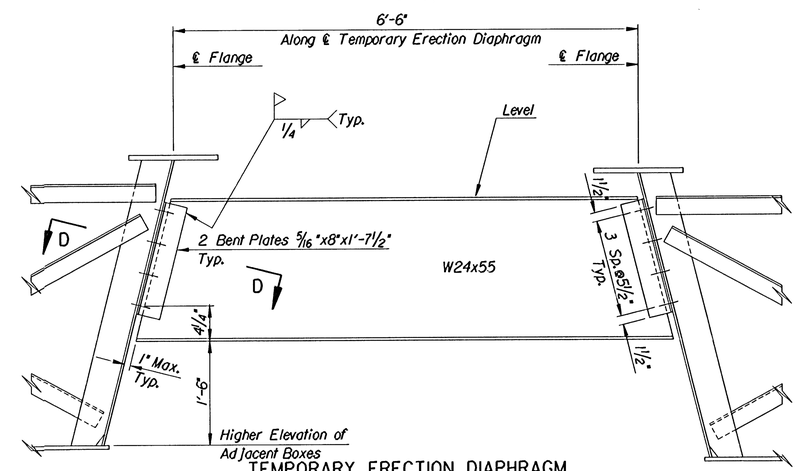

TEMPORARY ERECTION DIAPHRAGM
(84 Required)

Note:
The Temporary Erection Diaphragms shall be in place during placement and curing of the deck, after which they shall be removed with the exception of the 7/8" Dia. H.S. Bolts through the Web, which shall be reinserted in the holes and tightened.
Temporary Erection Diaphragms, Bent Plates and Bolts shall not be paid for directly, but shall be subsidiary to the bid item "Structural Steel, A709 (Gr. 36)". After Removal they shall become the property of the Contractor.

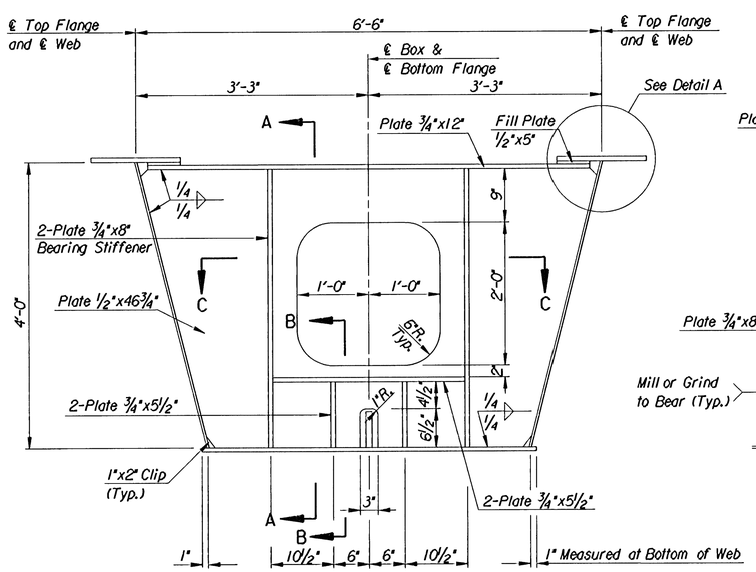

PIER DIAPHRAGM
(10 Required)

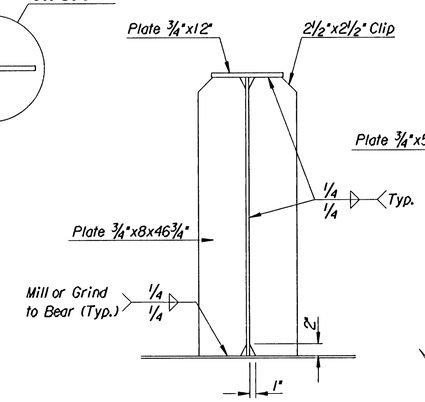

SECTION A-A

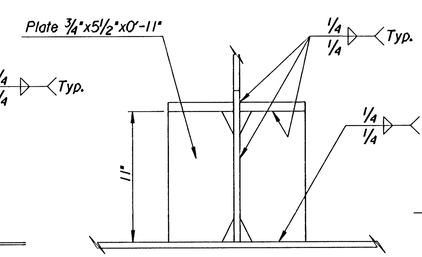

SECTION B-B

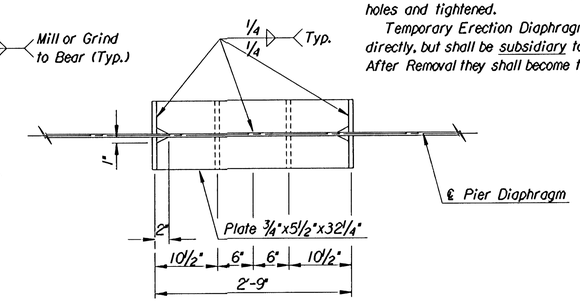

SECTION C-C

No.	Revisions	By	Date
1			

CITY OF WICHITA, KANSAS
MICHAEL E. LINDEBAK, P.E.-CITY ENGINEER
DOUGLAS AVENUE BRIDGE
OVER ARKANSAS RIVER

STRUCTURAL STEEL DIAPHRAGM DETAILS

CITY OF WICHITA PROJECT NO. 472-82721

PROFESSIONAL ENGINEERING CONSULTANTS, P.A.
ENGINEERS
WICHITA, KANSAS

Designed by	P.D.F.	Checked by	R.A.S.
Drawn by	J.G.P.	Date Sept. 1997	Job No. 95088-4

i:/1995/95088/douglas/diaphragdgn
drawn by: jgp
plotted by: ras 8-26-97