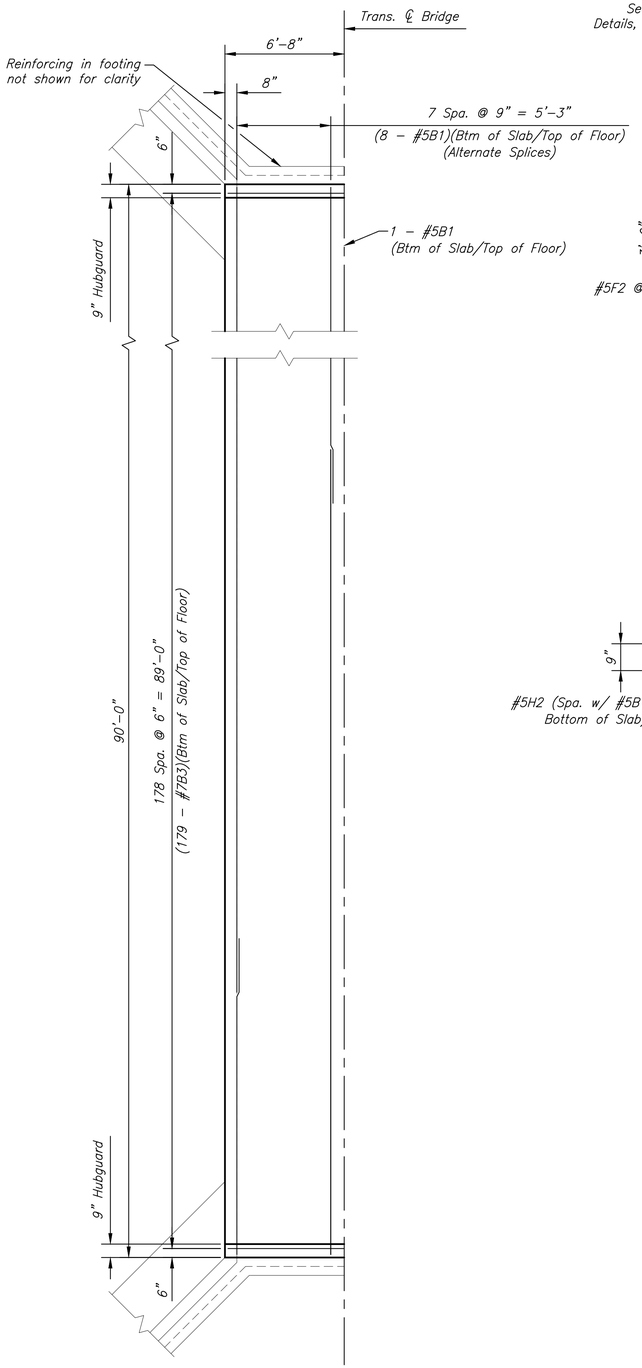

HALF PLAN

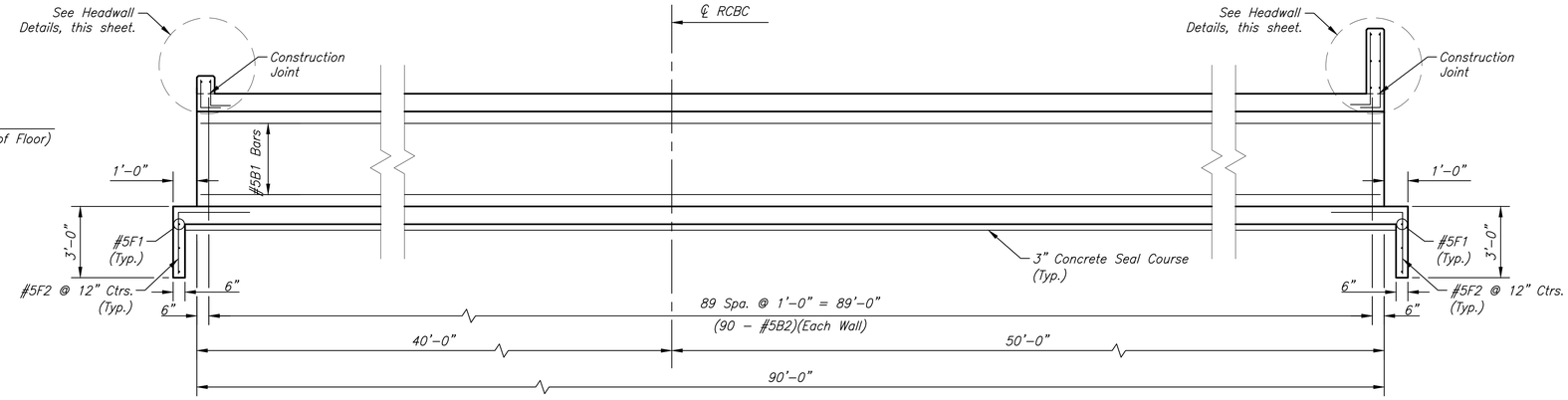

TYPICAL BARREL ELEVATION

(One Wall Shown, Two Required)(⊥ to Trans. ℄ Bridge)

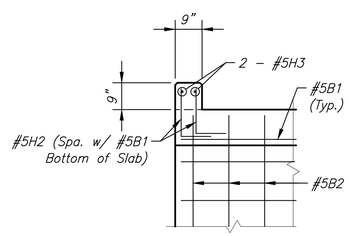

WEST HEADWALL

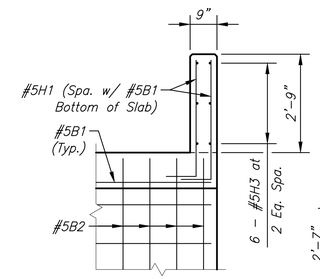

EAST HEADWALL

HEADWALL DETAILS

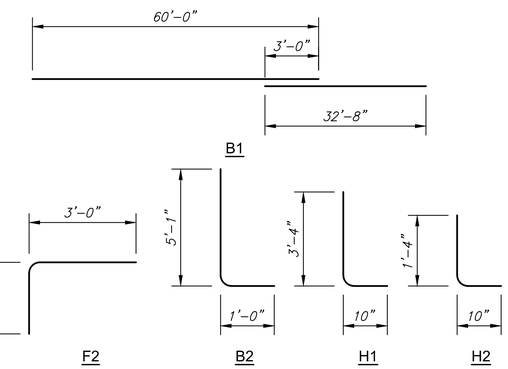

BAR BENDING DIAGRAMS

FOR INFORMATION ONLY

SUMMARY OF QUANTITIES (Barrel & Headwalls)	
Concrete (Grade 4.0)	87.5 C.Y.
Reinforcing Steel (Gr. 60)	15,290 Lbs.
Concrete for Seal Course	11.7 C.Y.

FOR INFORMATION ONLY

BILL OF REINFORCING STEEL
(Grade 60)(Barrel & Headwalls)

Straight Bars				Bent Bars			
Mark	Size	No.	Length	Mark	Size	No.	Length
B1	#5	42	92'–8"	B2	#5	180	6'–1"
B3	#7	358	13'–0"	F2	#5	26	5'–7"
F1	#5	6	13'–7"	H1	#5	34	4'–2"
H3	#5	8	13'–0"	H2	#5	34	2'–2"

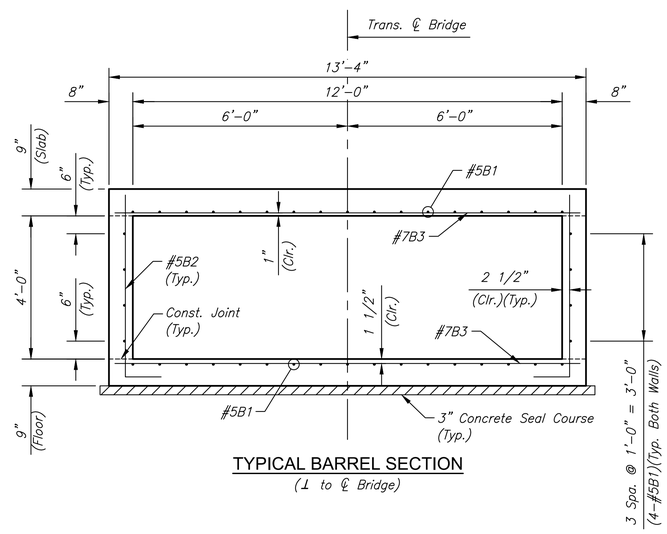

TYPICAL BARREL SECTION

(⊥ to ℄ Bridge)

GENERAL NOTES

DESIGN SPECIFICATION: AASHTO LRFD Spec., Eighth Ed.

DESIGN LOADING: HL93

UNIT STRESSES: Grade 4.0 Concrete; f'c = 4,000 p.s.i.
Reinforcing Steel; fy = 60,000 p.s.i.

CONCRETE: Grade 4.0 Concrete shall be used throughout. Bevel all exposed edges with a ¾ inch triangular moulding. Where Grade 4.0 Concrete is specified, it shall be placed in the top slab above the Construction Joint.

Prior to casting concrete against a previous casting, all concrete joint surfaces shall have a brush sandblast, power wash, and water soaked prior to casting.

REINFORCING: All reinforcing shall conform to ASTM A615, Grade 60. All dimensions relative to reinforcing steel shall be to centerline of bar unless otherwise noted.

Note: Some #5 reinforcing steel will require field bending or cutting. Cutting may be accomplished by cutoff saw or oxy–fuel. This work shall be subsidiary to Reinforcing Steel.

All reinforcing shall be certified (certified mill test reports) according to Section 2601, Type "A" certified, at Kansas Department of Transportation, Standard Specification For State Road & Bridge Construction–2015.

BACKFILL RCB & WINGWALLS: Use any material found within the project limits except Highly Plastic Clay(s) or organic material. The material is to be compacted to Type B, MR–90. The wingwalls shall be backfilled equally on both sides. Use on hand or walk behind equipment for compaction.

SEAL COURSE: A Seal Course shall be required. The Seal Course shall be unreinforced Concrete (Commercial Grade) to a minimum depth of 3 inches.

MKEC
Wichita, KS • 316-684-9600

PLANS FOR

RCB REPLACEMENT-TYLER & HARRY

CITY OF WICHITA, KANSAS

©2021
MKEC Engineering
All Rights Reserved
www.mkec.com
These drawings and their contents, including, but not limited to, all concepts, designs, & ideas are the exclusive property of MKEC Engineering (MKEC), and may not be used or reproduced in any way without the express consent of MKEC.

BARREL DETAILS

PROJECT NO.	1901010483
DATE	FEB. 2021
SCALE	N.T.S.
DESIGNED KJS	DRAWN RAM / CHECKED KJS

NO.	REVISION	DATE

SHEET NO.
10 OF 41

Sh. No. 10

PLOTTED: Thursday, February 11, 2021 @ 03:02PM
J:\PROJECTS\2019\1901010483_COV_RCB_TYLER AND HARRY_190483 CAD\SHTS\05 CIVIL\BRIDGE\190483-05-5251.DWG