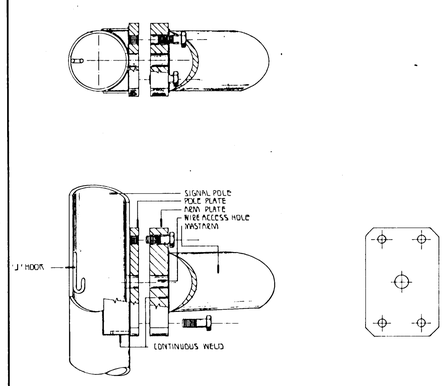
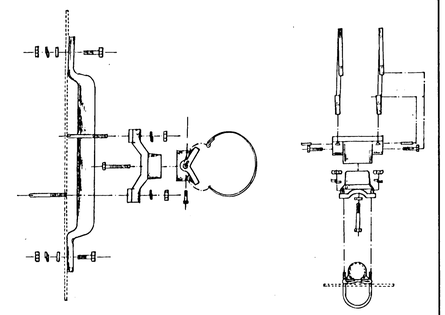
MASTARM MOUNTING DETAIL



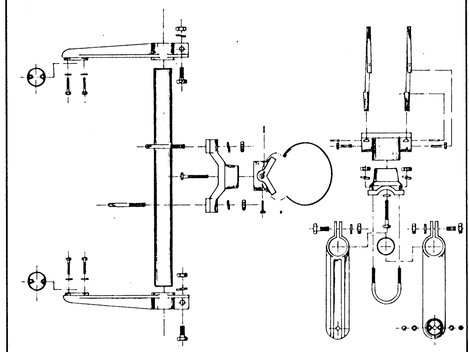
A

BANDED SIGN MOUNTING BRACKET DETAIL



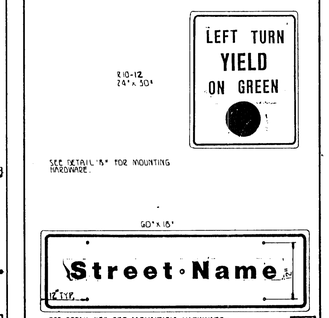
B

TYPE I SIGNAL MOUNTING BRACKET ASSEMBLY DETAIL



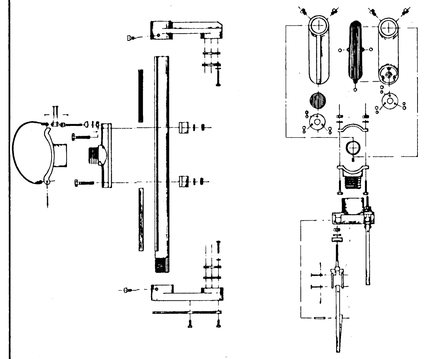
C1

STANDARD SIGNING



D

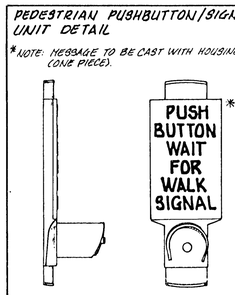
TYPE I SIGNAL MOUNTING BRACKET (ALTERNATE)



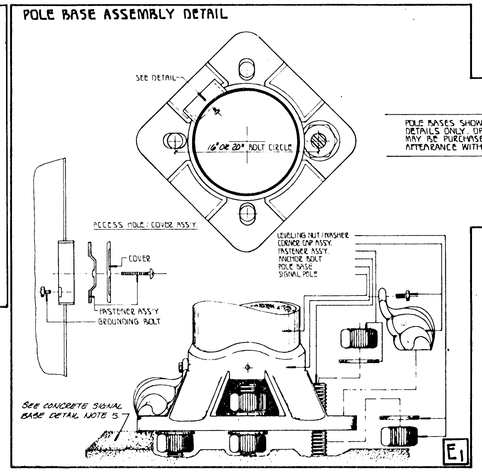
C2

BASEPLATE DETAIL

PEDESTRIAN PUSHBUTTON/SIGN UNIT DETAIL



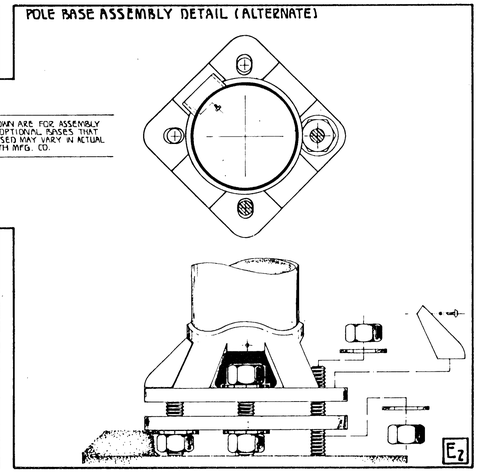
POLE BASE ASSEMBLY DETAIL



E1

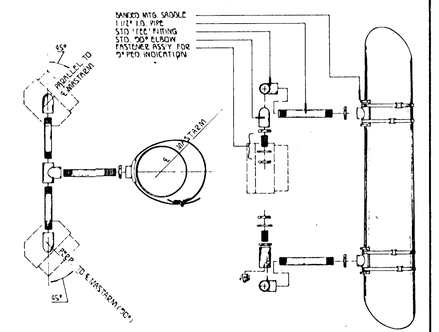
POLE BASES SHOWN ARE FOR ASSEMBLY DETAILS ONLY. OPTIONAL BASES THAT MAY BE PURCHASED MAY VARY IN ACTUAL APPEARANCE WITH MFG. CO.

POLE BASE ASSEMBLY DETAIL (ALTERNATE)



E2

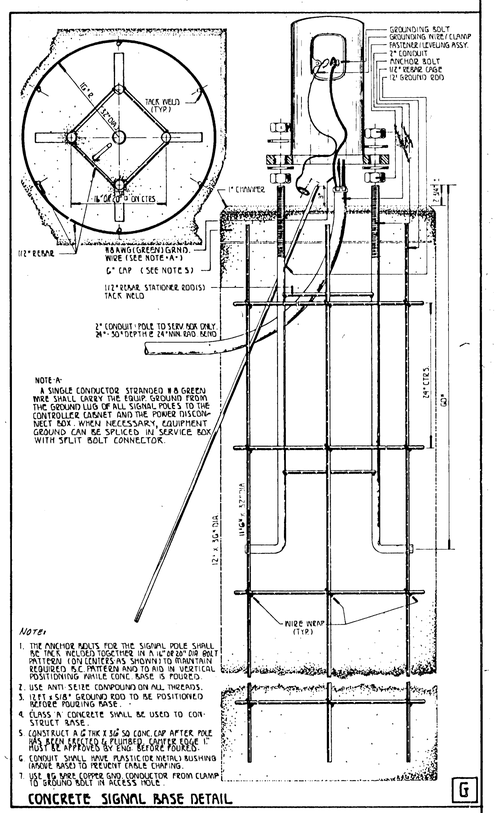
TYPE II OR III SIGNAL MOUNTING BRACKET ASSEMBLY (SIDE-OF-POLE) TYPE II SHOWN



1. DIRECTIONAL ALIGNMENT OF PED INDICATIONS & BRACKET (S) SHALL BE DETERMINED IN THE FIELD BY THE ENGINEER.
2. THROUGH HOLES IN THE POLE SHALL BE DRILLED AND WELL REAMED TO PREVENT CABLE CHAFING.

F

CONCRETE SIGNAL BASE DETAIL



Note:
1. THE ANCHOR BOLTS FOR THE SIGNAL POLE SHALL BE TACK WELDED TOGETHER IN A 16" OR 20" DIA. BOLT PATTERN (ON CENTERS AS SHOWN) TO MAINTAIN REQUIRED BOLT PATTERN AND TO AID IN VERTICAL POSITIONING WHILE CONC. BASE IS POURED.
2. USE ANTI SEIZE COMPOUND ON ALL THREADS.
3. 1½" x 5'-0" GROUND ROD TO BE POSITIONED BEFORE POURING BASE.
4. CLASS A CONCRETE SHALL BE USED TO CONSTRUCT BASE.
5. CONSTRUCT A 6" THK x 36" SQ. CONC. CAP AFTER POLE HAS BEEN PLUMBED & FINISHED. CRAFTED EDGE 1" MUST BE APPROVED BY END. BEFORE POURED.
6. CONDUIT SHALL HAVE PLASTIC (OR NEOPRI.) BUSHING (ABOVE BASE) TO PREVENT CABLE CHAFING.
7. USE #6 SOLID COPPER GND. CONDUCTOR FROM CLAMP TO GROUND ROLT IN ACCESS HOLE.

G

REV.	DATE	COMMENTS	INT
1	1-3-03	Design Modifications Per Clarification	SK
2	1-31-03	Add Base Depth Note for 18"x18"x24"	SK
3	2-5-03	Revised Mast Arm Blade to Signal Blade	SK
4	3-3-03	Add Note Regarding Grounding	SK
5	3-10-03	Changed Brackets to Equal Note and Added Note	SK
6	3-28-03	Revised Mounting Detail to Signal Arm	SK
7	4-8-03	Revised Note Regarding Base Edge	SK
8	5-5-03	Revised Per Request of Jeff Dec. 29	SK
9	7-15-03	Added Photocell Detail & Note	SK

REV.	DATE	COMMENTS	INT
1	DEC. 30	Revised Ground Rod	SK

PROJECT DESCRIPTION

STEEL SIGNAL POLE ASSEMBLY DETAILS

PROJECT NUMBER

BOOK NO. | APPROVED BY | DATE AUG. 03

DRAWN BY SCAL | REVISED

CITY OF WICHITA | SCALE

DEPARTMENT OF PUBLIC WORKS

DIVISION OF TRAFFIC ENGINEERING

WM. G. McKINLEY - TRAFFIC ENGINEER