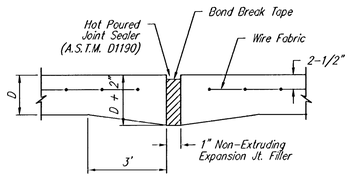

EXPANSION JOINT

NOTE: Extra Thickness to be Subsidiary to Price of Square Yards Pavement

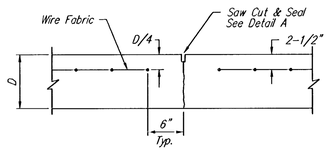

CONTRACTION JOINT DETAIL (C.J.)

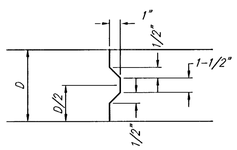

KEYWAY DETAIL

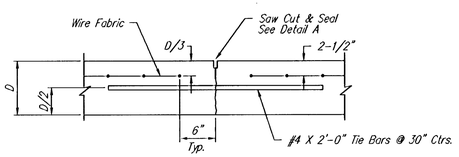

LONGITUDINAL JOINT DETAIL (L.J.)

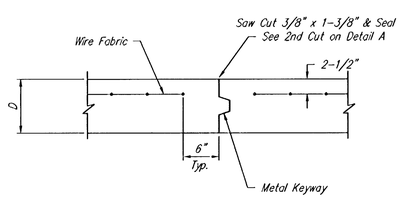

OPTIONAL CONTRACTION JOINT

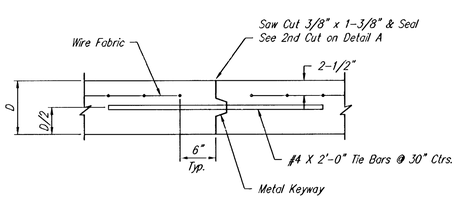

OPTIONAL LONGITUDINAL JOINT DETAIL (L.J.)

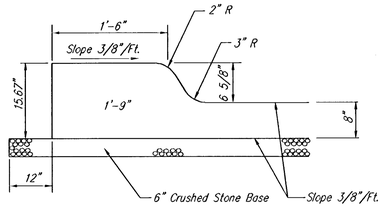

SPECIAL MONOLITHIC CURB

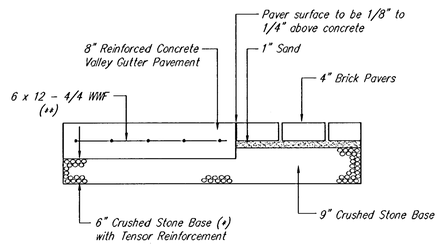

(**) 6 x 12 - 4/4 Welded Wire Fabric Reinforcing shall be placed such that the wires with 6" spacing will run parallel with the Longitudinal Joint. (*) 6" Crushed Stone Base to extend 12" beyond back of curb.

VALLEY GUTTER PAVEMENT

8" Reinforced Concrete w/6" Crushed Stone Base and Fabric Reinforcement

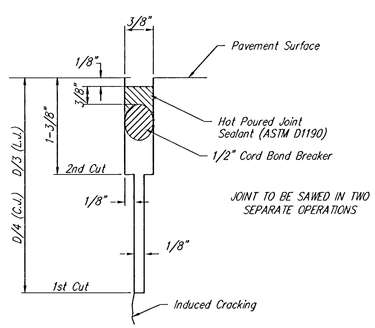

SAW JOINT DETAIL

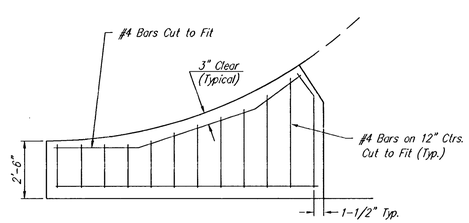

WING REINFORCING DETAIL

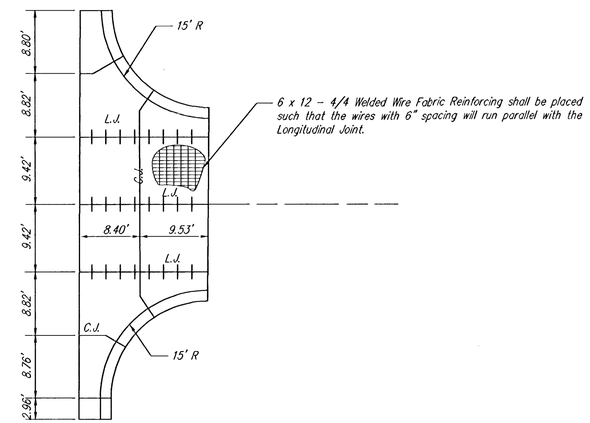

VALLEY GUTTER JOINT PLAN

8" Valley Gutter - Rock Island at First Street

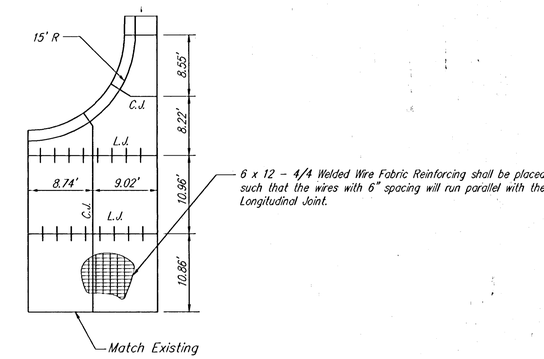

VALLEY GUTTER JOINT PLAN

8" Valley Gutter - Rock Island at First Street

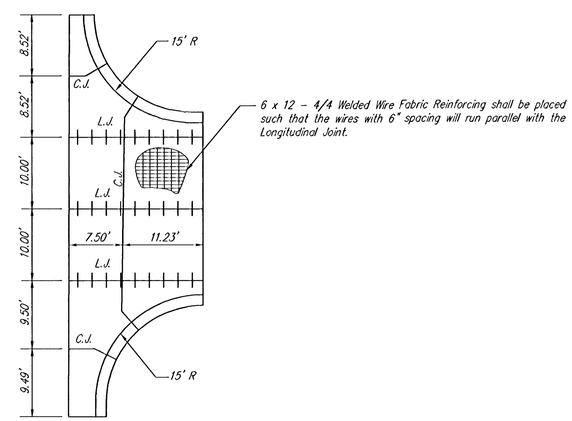

VALLEY GUTTER JOINT PLAN

8" Valley Gutter - Rock Island at First Street

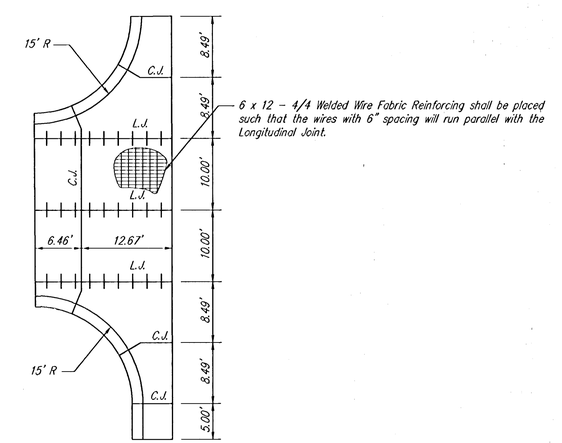

VALLEY GUTTER JOINT PLAN

8" Valley Gutter - Rock Island at Second Street

OLD TOWN STREET IMPROVEMENTS
VALLEY GUTTER DETAILS

SRB
841 SOUTH HILLSIDE
WICHITA, KANSAS 67211
316-652-7754
FAX 652-7932
SAVOY, RUGGLES & BOHM, P.A.
ENGINEERING & SURVEYING

REVISED

PROJECT NUMBER	INDEX CODE
472-82373/82374/82358	705749/705731

DRAWN	DESIGN	REVIEW	DATE	UTILITY	SRB JOB
T. Brooks	TCR		3/17/94		70E

DWG. FILE 70E\VGDTL

4
3

C:\AUTOCAD\CIVIL\PA\70E\VGDTL Thu Mar 17 12:53:48 1994