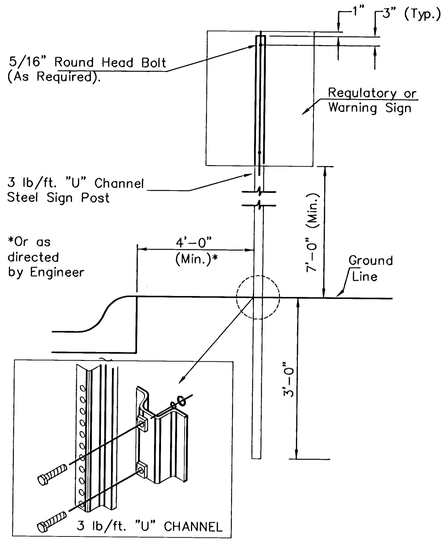


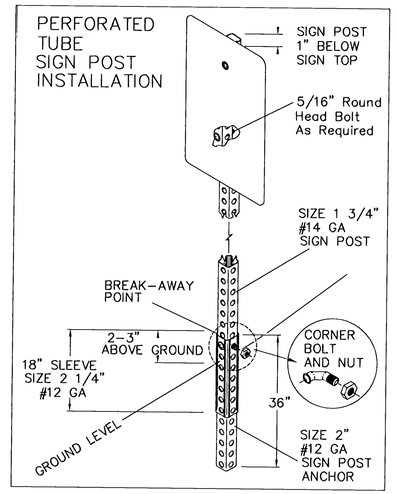


*TYPICAL TRAFFIC CONTROL SIGN MOUNTING INSTALLATION*

*CURB AND GUTTER SECTION*

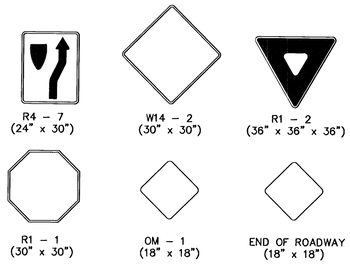


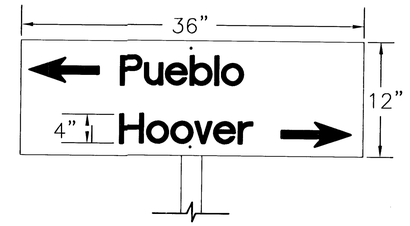


*FLAT PLATE STREET NAME SIGN*

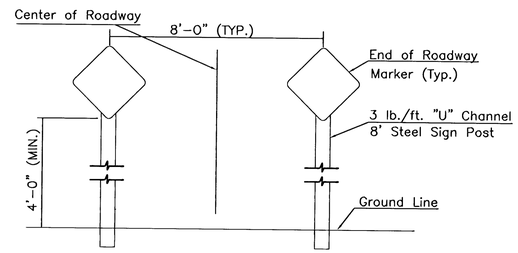


*TYPICAL END OF ROADWAY SIGN MOUNTING INSTALLATION*

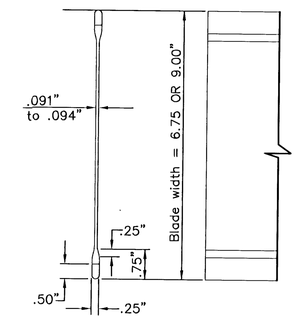


*STREET NAME SIGN*

*BLADE DETAILS*

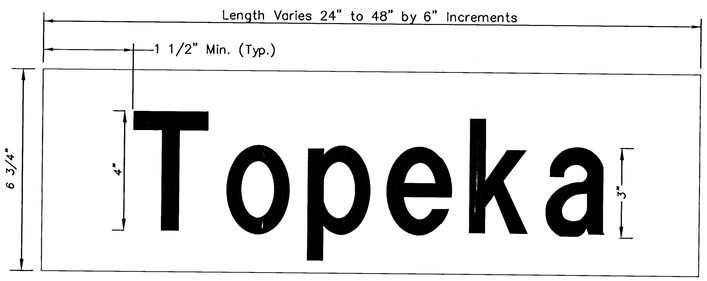


DETAIL A
6 3/4" STANDARD

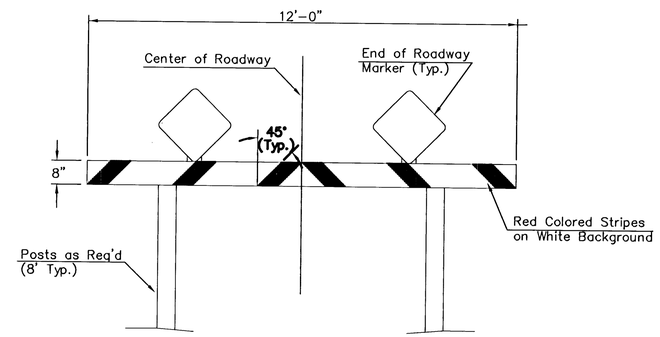


*TYPE I BARRICADE DETAIL W/ E.O.R. MARKERS*

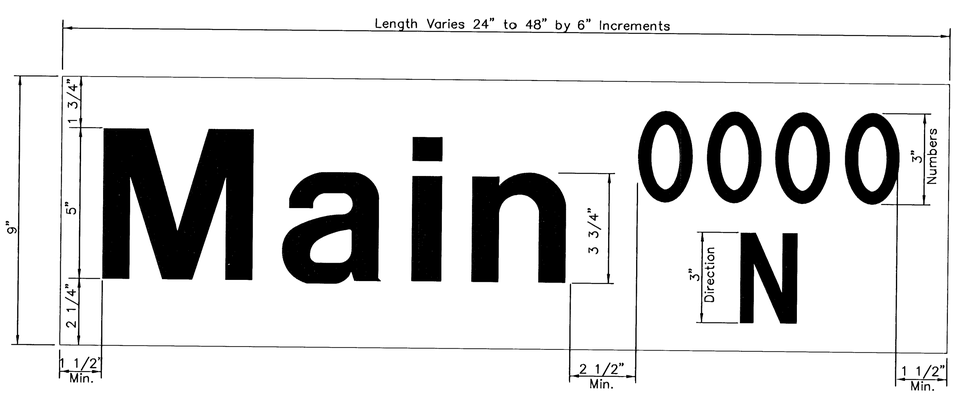


DETAIL B
9" METRO

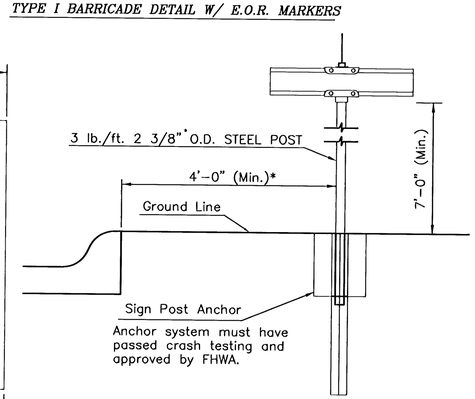


*TYPICAL STREET NAME SIGN MOUNTING INSTALLATION*

*CURB AND GUTTER SECTION*

## SIGN ASSEMBLY TABLE

| STATION | OFFSET | SIGN | QUANTITY* |
|---|---|---|---|
| 26+20 | 18' RT. | OM-3R | 1 |
| 26+48 | 64' RT. | OM-3R | 1 |
| | | | |
| | | | |
| | | |