FHWA REGION NO.	STATE	PROJECT NO.	YEAR	SHEET NO.	TOTAL SHEETS
7	KANSAS	87 N-0061-01	1998	15	91

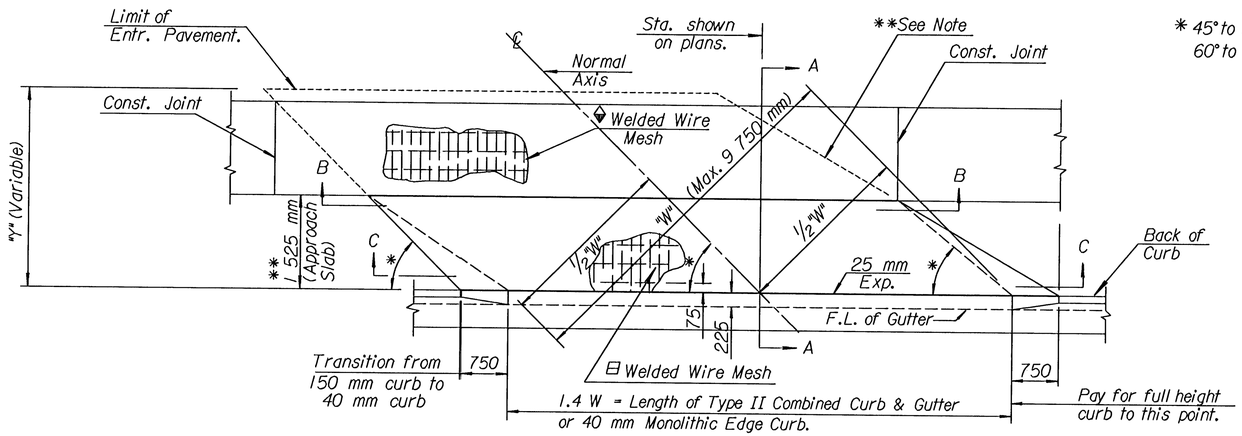

TYPICAL PLAN FOR
SKEWED ENTRANCE PAVEMENT

* 45° to 90° for one-way operation
60° to 90° for two-way operation

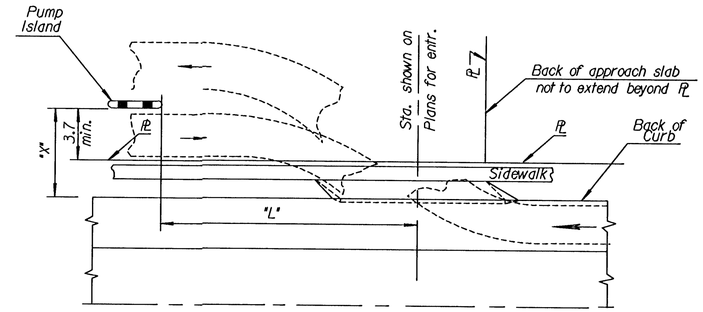

TYPICAL LOCATION SKETCH
FOR SKEWED ENTRANCES

Where "X" = 6.0 m , then "L" = 16.8 m
Where "X" = 7.5 m , then "L" = 18.5 m
Where "X" = 9.0 m , then "L" = 20.0 m
Where "X" = 10.5 m , then "L" = 21.0 m
Where "X" = 12.0 m , then "L" = 21.5 m

Note: Welded Wire Mesh shall be 300x150 - MW25.8 x MW25.8.
The longitudinal direction is assumed to be normal to the edge of pavement or gutter.

Welded Wire Mesh in approach slab shall be 150x150 - MW25.8 x MW25.8.

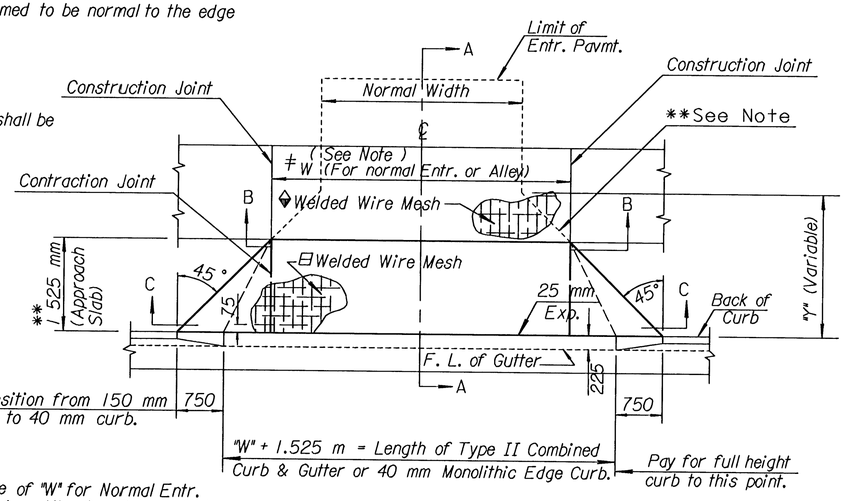

‡ Note :
Value of "W" for Normal Entr.
Use 4 m Min. for Private Entr.
Use 5 m Min. for Alley
Use 12 m Max.

TYPICAL PLAN FOR
NORMAL ENTRANCE PAVEMENT

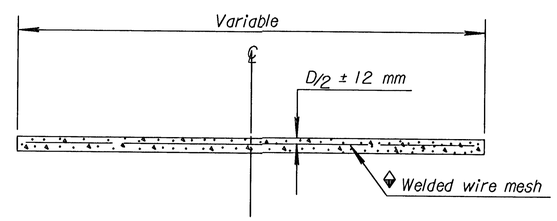

SECTION B - B

GENERAL NOTES

** The angles may be varied to fit special conditions. Entrance pavement, where required to extend beyond the 1 525 mm approach slab, shall follow the extension of the lines shown to the limit of dimension "Y". Beyond this limit the pavement shall follow the normal alley or entrance driveway width. The 1 525 mm approach slab of concrete entrance pavement is to be shaped as shown, regardless of sidewalk location. Entrance approach slab shall be constructed unless otherwise designated.

Approx. mass of Welded Wire Mesh = 2.87 kg/m².

Expansion joints shall be 125 mm of premoulded Exp. Joint Filler (Nonextruding, Type B) and 25 mm of Hot or Cold poured Joint Sealing Compound.

Where valley gutter, alley, and/or entrance pavement is the only pavement on the project, Class A (AE) Concrete may be used, and subbgrade paper and joint parting strips will not be required.

A longitudinal tied joint shall be constructed at W/2 on slabs greater than 4.5 m in width. Location of joints on wider slabs should aid in guiding the placement of vehicles entering and leaving the entrance. Minimum joint spacing shall be 1.8 m.

As an alternate to the welded wire mesh, joints in the approach slab may be tied with #13 x 600 mm tie bars at 300 mm spacing.

Welded Wire Mesh and/or tie bars shall be placed using chairs to assure correct vertical placement.

No tie bars or mesh shall extend through the joint of the approach slab with the sidewalk or alley.

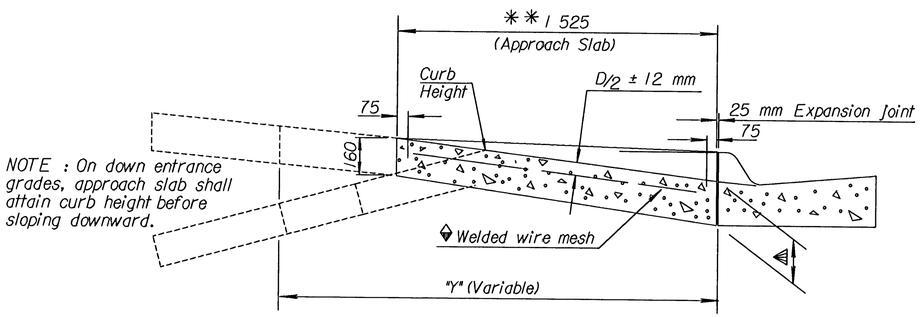

NOTE : On down entrance grades, approach slab shall attain curb height before sloping downward.

SECTION A - A

Match thickness at back of Type II Curb & Gutter.

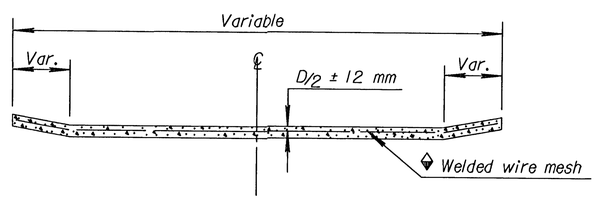

SECTION C - C

NO.	DATE	REVISIONS	BY	APP'D
2				
1	6-30-97	Rev. wire mesh, thickness and notes	R.J.S.	J.O.B.

KANSAS DEPARTMENT OF TRANSPORTATION

ALLEY & ENTRANCE PAVEMENT

RD683 SI

FHWA APPROVAL	10-15-97	APP'D. James O. Brewer			
DESIGNED	DETAILED	QUANTITIES	TRACED	W.C.H.	
DESIGN CK.	DETAIL CK.	QUAN.CK.	TRACE CK.	R.J.S.	

Drawn By : $$USERNAME$$ Plotted : $$$$$$SYTIME$$$$$$
File : $$$$$$$$$$$$$$$$$$DGNSPEC$$$$$$$$$$$$$$$$