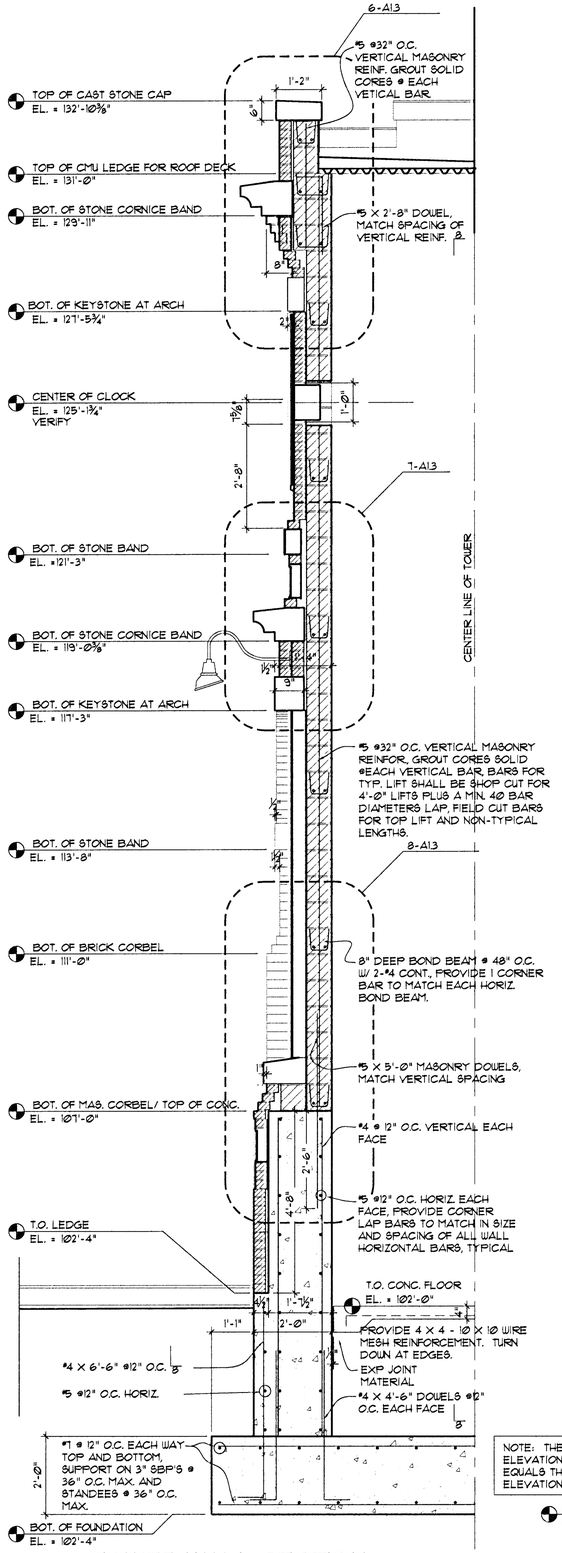

1 TOWER WALL SECTION
½" = 1'-0"

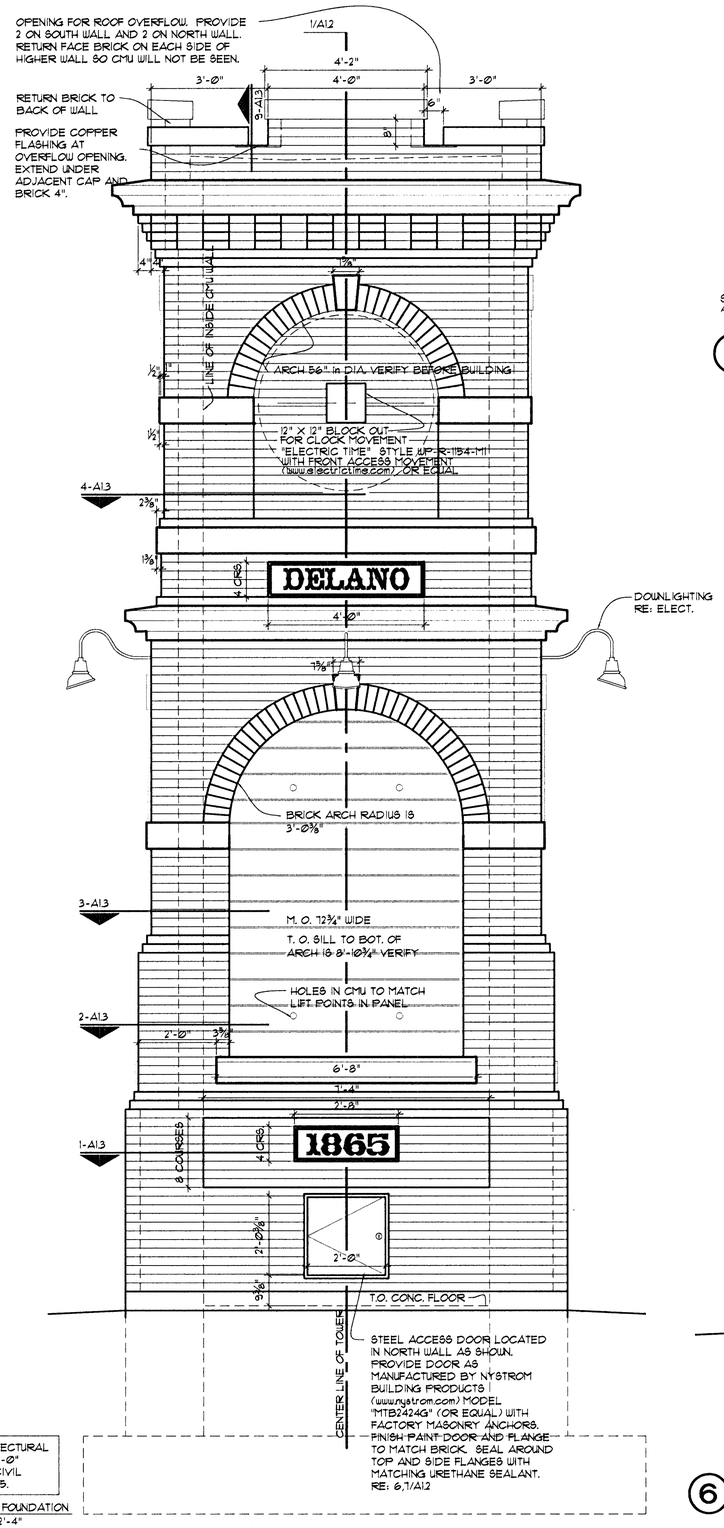

NOTE: THE ARCHITECTURAL ELEVATION OF 100'-0" EQUALS THE SITE CIVIL ELEVATION OF 113.09.

BOT. OF FOUNDATION EL. = 102'-4"

2 NORTH TOWER ELEVATION
½" = 1'-0"

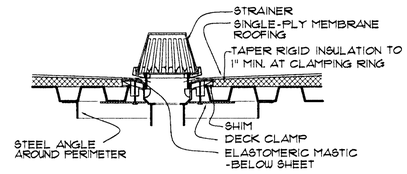

3 ROOF DRAIN DETAIL
A505-4.DWG
N.T.S.

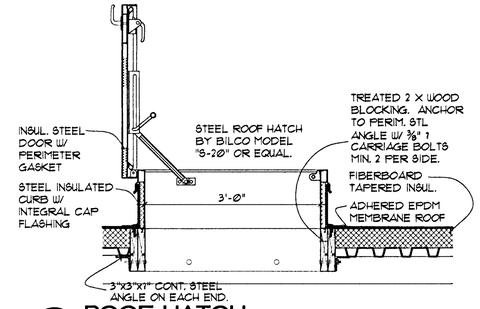

4 ROOF HATCH
FLDNAME.DWG
N.T.S.

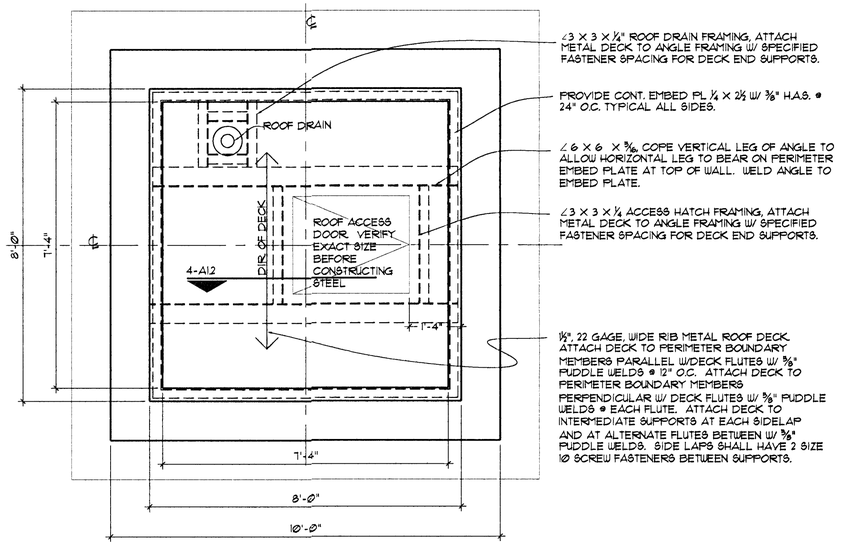

5 ROOF PLAN
1/2" = 1'-0"

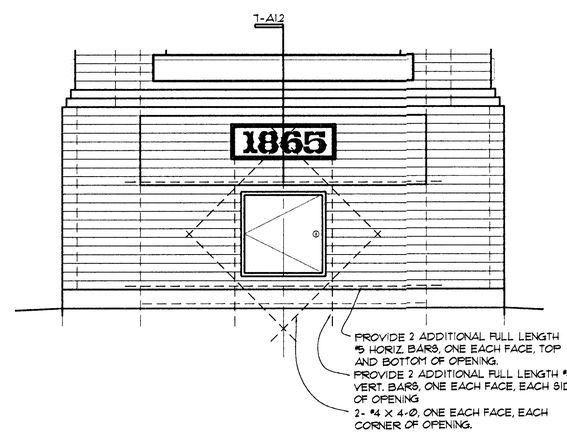

6 ACCESS OPENING DET.
½" = 1'-0"

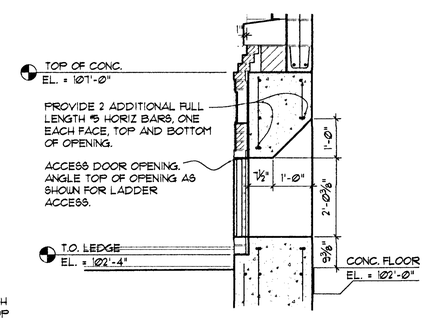

7 ACCESS DOOR SECTION
½" = 1'-0"

McCLUGGAGE VAN SICKLE & PERRY
ARCHITECTS · PLANNERS · LANDSCAPE ARCHITECTS
125 S. WASHINGTON WICHITA, KANSAS 67202
P.O. BOX 3948 WICHITA, KANSAS 67201
PH. 316.262.1345 · FAX. 316.262.5465

WEST DOUGLAS STREETSCAPE
ARKANSAS RIVER TO SENECA
WICHITA, KANSAS

PROJECT NO. 472 836.08
MVP PROJECT NO. 101008
DATE: AUGUST 1, 2002
REVISED:

REVISED CONST. SET:
FEBRUARY 7, 2003

CITY OF WICHITA

SHEET
A1.2