FHWA REGION NO.	STATE	PROJECT NO.	YEAR	SHEET NO.	TOTAL SHEETS
7	KANSAS	87N-0196-01	2001	23	55

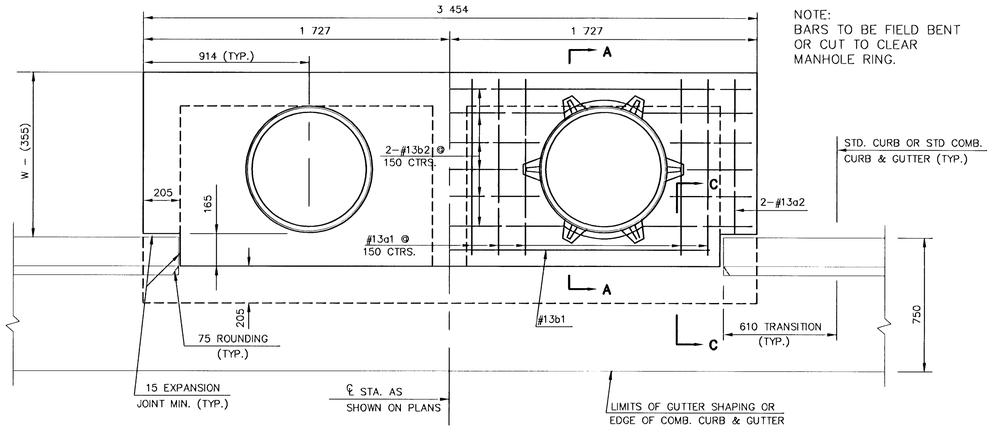

NOTE:
BARS TO BE FIELD BENT OR CUT TO CLEAR MANHOLE RING.

SLAB REINFORCING NOT SHOWN

SHOWING SLAB REINFORCING

PLAN

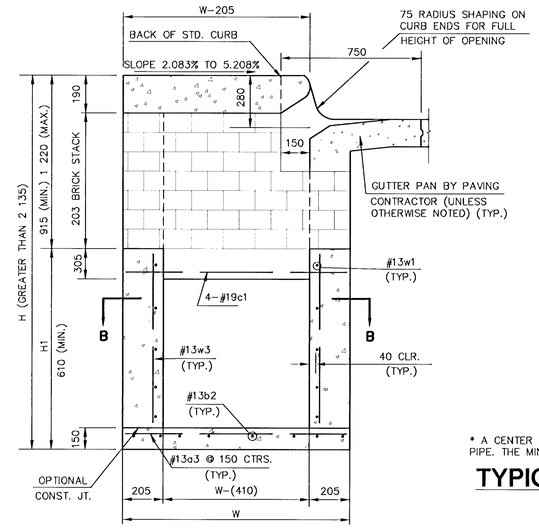

TYPICAL INLET SECTION AT CENTER WALL
(REINFORCED CONCRETE WALLS)

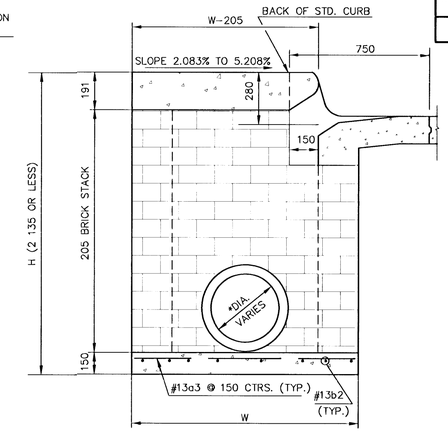

* A CENTER WALL OPENING SHALL BE PROVIDED BY MEANS OF A SECTION OF REINFORCED CONCRETE PIPE. THE MINIMUM DIAMETER USED SHALL BE THAT OF THE OUTLET PIPE.

TYPICAL INLET SECTION AT CENTER WALL
(MASONRY WALLS)

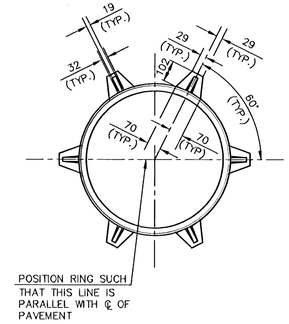

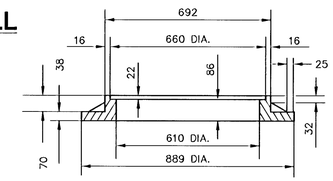

INLET FRAME
WT.=81.65 kg

SEE CITY OF WICHITA STANDARD MANHOLE FRAME AND COVER DETAIL SHEET FOR COVER DETAILS TO BE USED WITH INLET FRAME.

COVERS SHALL HAVE THE LETTERING "CITY OF WICHITA STORM WATER"

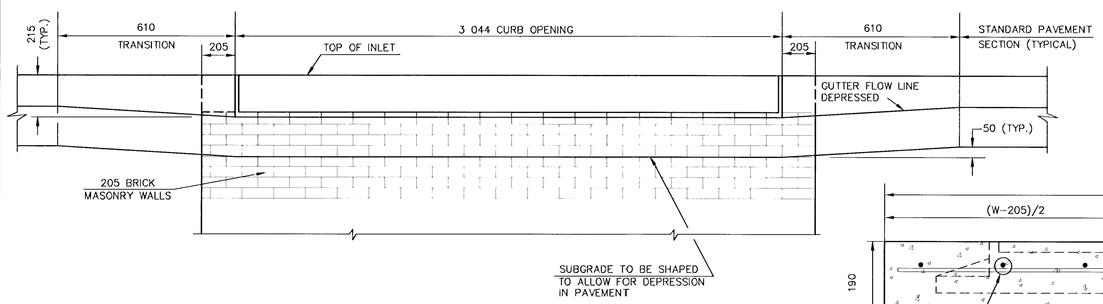

ELEVATION

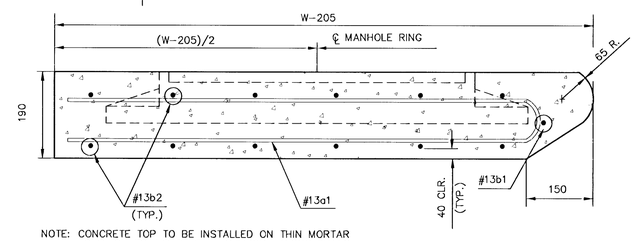

NOTE: CONCRETE TOP TO BE INSTALLED ON THIN MORTAR CUSHION TO INSURE FULL SUPPORT ALONG WALLS.

SECTION A-A

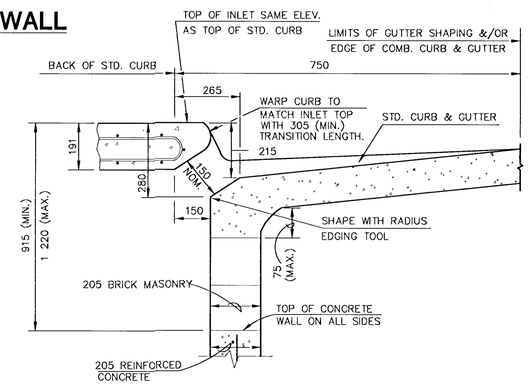

SECTION C-C

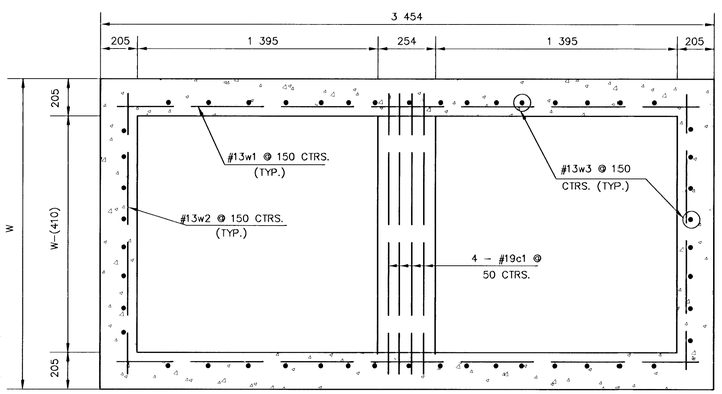

SECTION B-B

SLAB AND FLOOR REINFORCING

		W=1 321		W=1 626		W=1 930		W=2 235		W=2 540	
MARK	SIZE	NO.	LENGTH	NO.	LENGTH	NO.	LENGTH	NO.	LENGTH	NO.	LENGTH
a1	#13	13	2 015	13	2 625	13	3 230	13	3 840	13	4 450
a2	#13	2	1 830	2	2 440	2	3 050	2	3 660	2	4 265
a3	#13	20	1 245	20	1 550	20	1 855	20	2 160	20	2 465
b1	#13	1	2 945	1	2 945	1	2 945	1	2 945	1	2 945
**b2	#13	18	3 380	24	3 380	30	3 380	36	3 380	42	3 380

WALL REINFORCING

		W=1 321		W=1 626		W=1 930		W=2 235		W=2 540	
MARK	SIZE	NO.	LENGTH	NO.	LENGTH	NO.	LENGTH	NO.	LENGTH	NO.	LENGTH
c1	#19	4	1 855	4	2 160	4	2 465	4	2 770	4	3 075
w1	#13	①	3 380	①	3 380	①	3 380	①	3 380	①	3 380
w2	#13	①	1 245	①	1 550	①	1 855	①	2 160	①	2 465
w3	#13	②	③	②	③	②	③	②	③	②	③

** FIELD BEND OR CUT REINFORCING AS REQUIRED FOR CLEARANCE

① $2\left(\frac{(H1-200)}{150}+1\right)$

② $40 + 2\left(\frac{(W-410)}{150}+1\right)$

③ H1-(230)

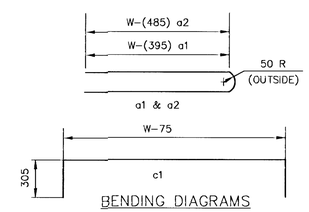

BENDING DIAGRAMS

STANDARD CURB INLET PRECAST TOPS			
W	PRE-CAST TOP SIZE	PIPE SIZE	m³ CONC.
1 321	1 116 x 3 454 x 190	530 & SMALLER	± 0.63
1 626	1 421 x 3 454 x 190	600 & 750	± 0.83
1 930	1 725 x 3 454 x 190	900 & 1 050	± 1.03
2 235	2 030 x 3 454 x 190	1 200 & 1 350	± 1.23
2 540	2 335 x 3 454 x 190	1 500 & 1 675	± 1.43

GENERAL NOTES

1. CONCRETE SHALL BE C.O.W. STANDARD PAVING MIX. ALL EXPOSED EDGES SHALL BE FINISHED WITH AN EDGING TOOL. REINFORCING BARS SHALL BE FIELD BENT OR CUT TO CLEAR PIPES. ALL BARS ARE #13 BARS AT 150 mm SPACING AND SHALL HAVE A MINIMUM CLEARANCE OF 40 mm UNLESS OTHERWISE NOTED. FLOORS OF INLET SHALL BE SHAPED WITH 8 SACK SAND MIX CONCRETE TO INCREASE HYDRAULIC EFFICIENCY SUCH THAT THE INLET WILL BE SELF CLEANING BETWEEN ALL INLET AND/OR OUTFALL PIPE(S). THE CONTRACTOR WILL BE REQUIRED TO CONSTRUCT 205 mm BRICK MASONRY WALLS BETWEEN THE CONCRETE INLET BASE AND TOP ON THIS INLET WHEN H= 2 135 mm OR LESS AND W= 1 930 mm OR LESS.
2. THE ENDS OF ALL PIPES INSTALLED IN INLETS SHALL BE CUT OFF FLUSH WITH THE INSIDE FACE OF THE INLET WALL.

REVISED: 12-21-1984

STANDARD TYPE 1 CURB INLET
INLET OPENING=150 x 3 044

OCTOBER, 1984

CITY OF WICHITA, KANSAS

Design BER KJS MWB	Checked by	Checked by	
Drawn by	Date	Date	Job No.

H:\CIVIL\98166\METRIC\DETAILS\6x10-1SI.DWG Fri May 25 09:54:08 2001