FHWA REG NO.	STATE	PROJECT NO.	YEAR	SHEET NO.	SHEETS
7	KANSAS	87N-0196-01	2001	25	55

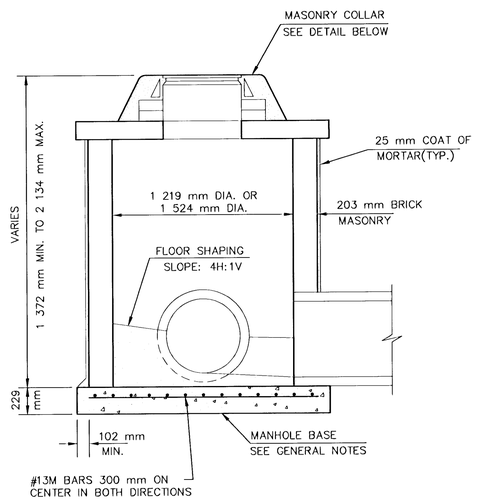

SHALLOW TYPE "A" MANHOLE

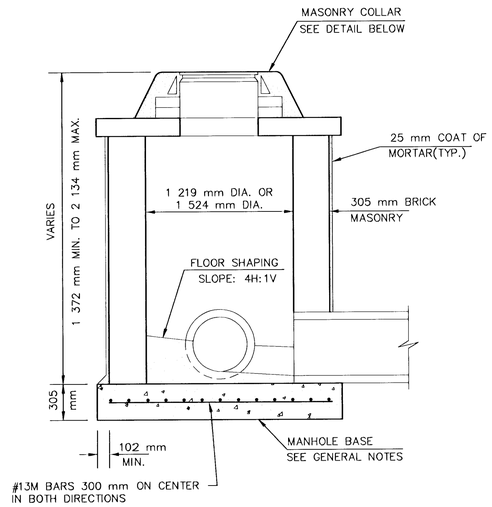

SHALLOW TYPE "B" MANHOLE

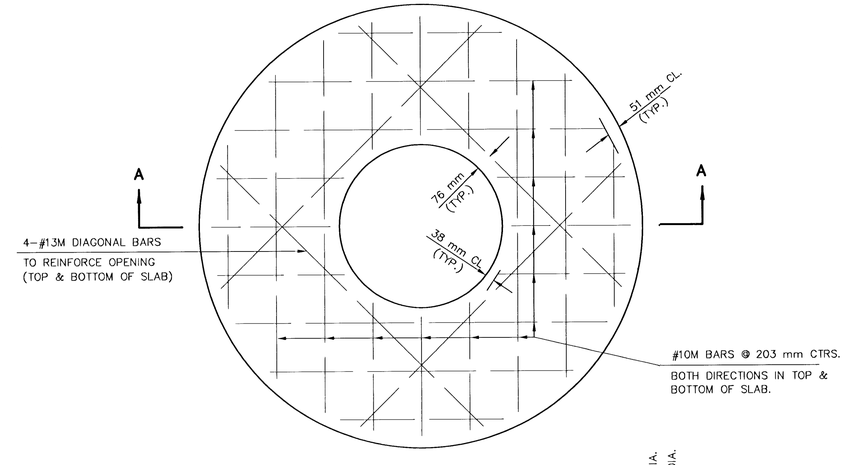

PLAN

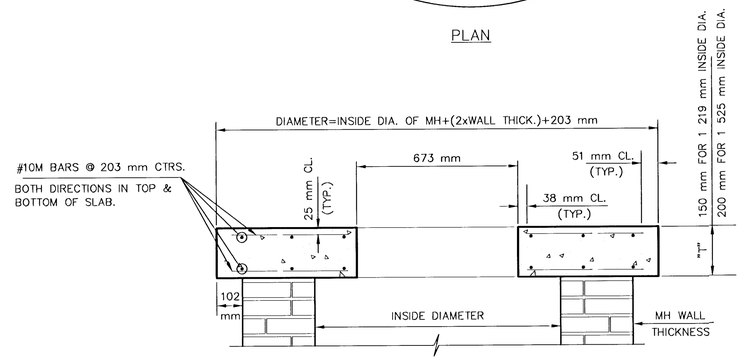

SECTION A-A

FLAT CONCRETE SLAB DETAILS

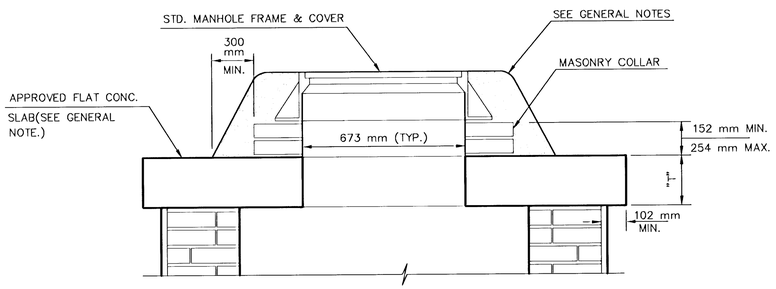

MASONRY COLLAR DETAIL

GENERAL NOTES

1. MORTAR USED IN MASONRY CONSTRUCTION SHALL CONTAIN 10.5 SACKS OF CEMENT PER CUBIC METER. CONCRETE USED IN MANHOLE BASES SHALL CONFORM TO THE REQUIREMENTS OF CONCRETE FOR CONCRETE PAVEMENT CONSTRUCTION AS SPECIFIED IN THE CITY STANDARD PAVING SPECIFICATIONS USING CITY CONCRETE CEMENT MIX WITHOUT AIR ENTRAINING ADMIXTURE. MORTAR SHALL BE PLACED AROUND THE MANHOLE RING AS SHOWN ON THE DRAWINGS WHEN MANHOLES ARE CONSTRUCTED IN UNPAVED AREAS. TYPE "A" SHALLOW MANHOLES CAN BE USED ON SEWERS WHEN THE MANHOLE IS NOT LOCATED WITHIN PUBLIC STREET PAVEMENT. MANHOLES CONSTRUCTED WHERE PIPE SIZES ARE SMALLER THAN 610 mm SHALL HAVE AN INSIDE DIAMETER OF 1 219 mm. MANHOLES CONSTRUCTED WHERE PIPE SIZES ARE 610 mm OR LARGER SHALL HAVE AN INSIDE DIAMETER OF 1 524 mm. COMPLETED MANHOLE SHALL BE WITHOUT LEAKS AND WATER TIGHT.
2. REINFORCING STEEL SHALL BE INSTALLED IN THE MANHOLE BASES AND SHALL CONSIST OF #10M BARS PLACED ON 150 mm CENTERS IN BOTH DIRECTIONS. THE MANHOLE BASE REINFORCEMENT SHALL BE PLACED 150 mm ABOVE THE BOTTOM OF THE MANHOLE BASE. ALL COSTS FOR FURNISHING AND INSTALLING REINFORCING STEEL SHALL BE INCLUDED IN THE UNIT PRICE BID FOR THE MANHOLE.
3. THE FLOORS OF ALL MANHOLES SHALL BE SHAPED WITH FLOW CHANNELS SUCH THAT THE MANHOLES WILL BE SELF CLEANING AND FREE OF AREAS WHERE SOLIDS COULD BE DEPOSITED AS SEWAGE FLOWS THROUGH THE MANHOLE FROM ALL INLET PIPES TO THE OUTLET PIPE. FLOW CHANNELS SHALL BE FORMED TO MATCH THE BOTTOM HALVES OF THE INFLOWING PIPES AND THE OUTFLOWING PIPE AS SHOWN BY THE DRAWINGS. MANHOLE FLOORS SHALL HAVE SLOPES OF 4H:1V IN THE AREAS OUT-SIDE OF THE FLOW CHANNELS SLOPED TOWARD THE FLOW CHANNELS. PIPES LAID THROUGH MANHOLES SHALL HAVE THE TOP HALF REMOVED TO NEAT LINES FOR THE FULL INSIDE DIAMETER OF THE MANHOLE. MANHOLE FLOORS SHALL THEN BE SHAPED AROUND THE BOTTOM HALF OF THE PIPE WHICH FORMS THE FLOW CHANNEL.
4. PIPES INSTALLED WITHIN THE EXCAVATION MADE FOR THE MANHOLE SHALL BE CRADLED WITH CONCRETE TO THE LIMITS OF THE MANHOLE EXCAVATION. WHEN CLAY PIPE IS USED, THE CRADLE SHALL EXTEND TO THE FIRST JOINT OUTSIDE THE MANHOLE. THE CRADLE SHALL BE TERMINATED AT THE CLAY PIPE JOINT IN A MANNER WHICH WILL MAINTAIN THE FLEXIBILITY OF THE JOINT. COST OF CRADLE WITHIN MANHOLE EXCAVATION OR TO CLAY PIPE JOINTS ADJACENT TO MANHOLE SHALL BE INCLUDED IN THE UNIT PRICE BID FOR THE MANHOLE.
5. MANHOLE COVER CASTINGS AND MANHOLE FRAME CASTINGS SHALL CONFORM TO THE REQUIREMENTS AS INDICATED IN THE STANDARD SPECIFICATIONS AND AS SHOWN IN THE STANDARD DETAIL DRAWINGS.
6. THE CROWNS OF INFLOWING PIPES SHALL NEVER BE SET LOWER THAN THE CROWN OF THE OUTFLOWING PIPE.
7. STANDARD SHALLOW MANHOLES TYPE "A" AND "B" SHALL BE PAID FOR AT THE UNIT PRICE BID PER EACH FOR THE TYPE AND DIAMETER INDICATED. STANDARD SPECIAL SHALLOW MANHOLES TYPE "A" AND "B" SHALL BE PAID FOR AT THE UNIT PRICE BID PER EACH FOR THE TYPE INDICATED. ALL STANDARD SHALLOW MAN-HOLE DIAMETERS WILL BE 1 219 mm UNLESS INDICATED OTHERWISE.
8. BACKFILL TRENCH USED TO INSTALL MANHOLES WITHIN ROADWAY WITH FLOWABLE FILL.

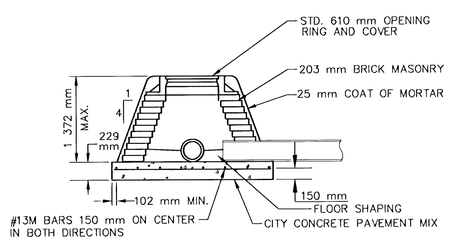

SPECIAL SHALLOW TYPE "A" MANHOLE

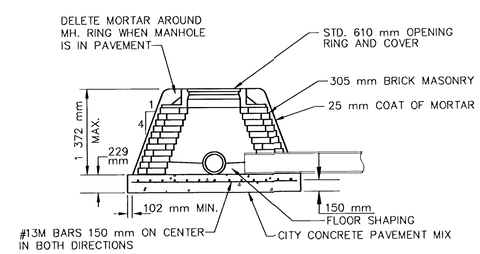

SPECIAL SHALLOW TYPE "B" MANHOLE

STANDARD SHALLOW MANHOLES TYPE "A" AND TYPE "B"

CITY OF WICHITA, KANSAS

Design C.O.W.	Checked by	Checked by	
Drawn by	Date	Date	Job No.

H:\CIVIL\98166\METRIC\DETAILS\MET_AB.DWG Fri May 25 09:58:59 2001
H:\CIVIL\98166\METRIC\DETAILS\MET_AB.DWG