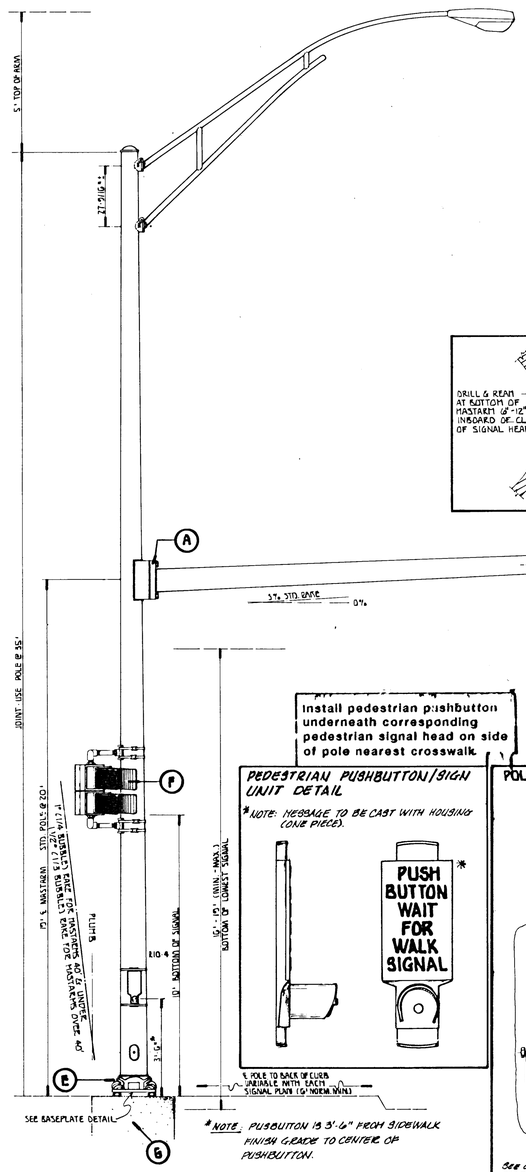

BASEPLATE DETAIL

* NOTE: PUSHBUTTON IS 3'-6" FROM SIDEWALK FINISH GRADE TO CENTER OF PUSHBUTTON.

MASTARM MOUNTING DETAIL

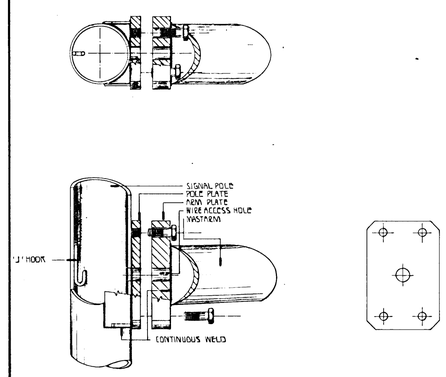

A

BANDED SIGN MOUNTING BRACKET DETAIL

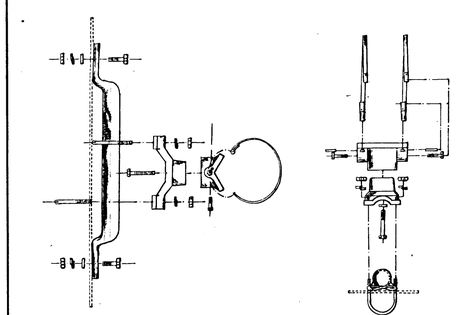

B

TYPE I SIGNAL MOUNTING BRACKET ASSEMBLY DETAIL

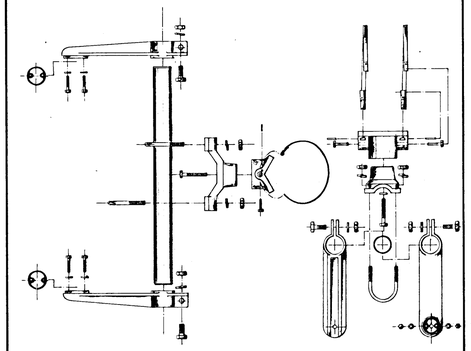

C1

STANDARD SIGNING

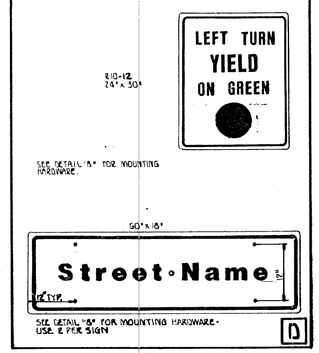

D

TYPE I SIGNAL MOUNTING BRACKET (ALTERNATE)

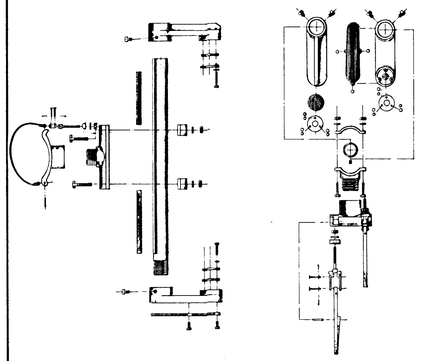

C2

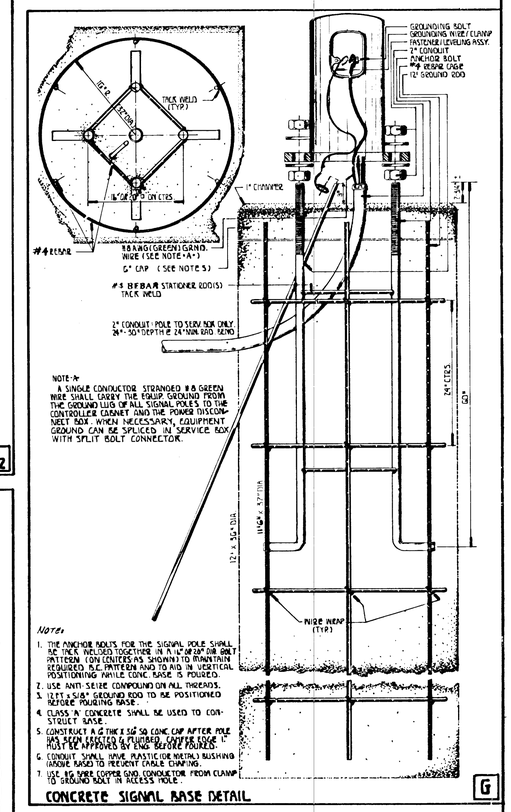

NOTE "A"
A SINGLE CONDUCTOR STRANDED #8 GREEN WIRE SHALL CARRY THE EQUIP. GROUND FROM THE GROUND LUG OF ALL SIGNAL POLES TO THE CONTROLLER CABINET AND THE POWER DISCONNECT BOX. WHEN NECESSARY, EQUIPMENT GROUND CAN BE SPLICED IN SERVICE BOX WITH SPLIT BOLT CONNECTOR.

NOTE:
1. THE ANCHOR BOLTS FOR THE SIGNAL POLE SHALL BE TACK WELDED TOGETHER IN A 12" OR 24" OR BOLT PATTERN (ON CENTERS AS SHOWN) TO MAINTAIN REQUIRED B.C. PATTERN AND TO AID IN VERTICAL POSITIONING WHILE CONC. BASE IS POURED.
2. USE ANTI-SEIZE COMPOUND ON ALL THREADS.
3. 12' x 5/8" GROUND ROD TO BE POSITIONED BEFORE POURING BASE.
4. CLASS "A" CONCRETE SHALL BE USED TO CONSTRUCT BASE.
5. CONSTRUCT A 6" THICK SQ. CONC. CAP AFTER POLE HAS BEEN LEVELED & PLUMBED. COPPER BASE "C" MUST BE APPROVED BY ENG. BEFORE POURED.
6. CONDUIT SHALL HAVE PLASTIC (OR METAL) BUSHING ABOVE BASE TO PREVENT CABLE CHAFING.
7. USE #6 BARE COPPER GND. CONDUCTOR FROM CLAMP TO GROUND BOLT IN ACCESS HOLE.

CONCRETE SIGNAL BASE DETAIL

G

Install pedestrian pushbutton underneath corresponding pedestrian signal head on side of pole nearest crosswalk.

PEDESTRIAN PUSHBUTTON/SIGN UNIT DETAIL

* NOTE: MESSAGE TO BE CAST WITH HOUSING (ONE PIECE).

POLE BASE ASSEMBLY DETAIL

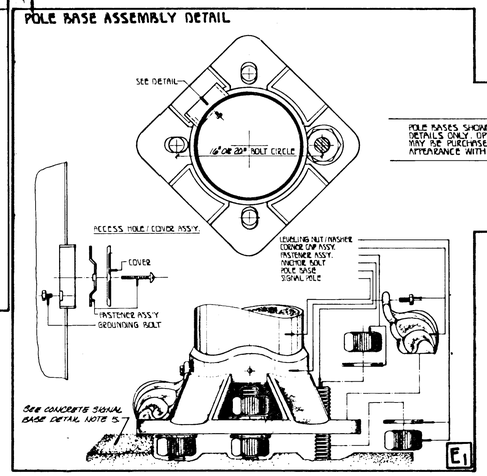

E1

POLE BASES SHOWN ARE FOR ASSEMBLY DETAILS ONLY. OPTIONAL BASES THAT MAY BE PURCHASED MAY VARY IN ACTUAL APPEARANCE WITH INFO. CO.

POLE BASE ASSEMBLY DETAIL (ALTERNATE)

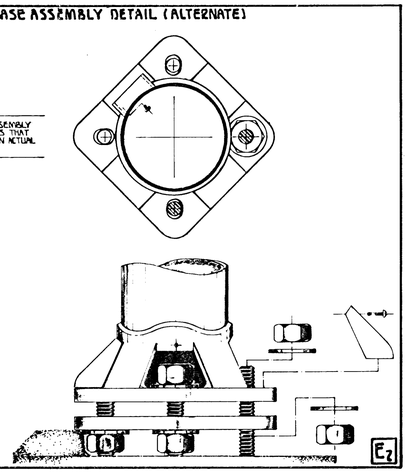

E2

TYPE II OR III SIGNAL MOUNTING BRACKET ASSEMBLY (SIDE-OF-POLE) TYPE II SHOWN

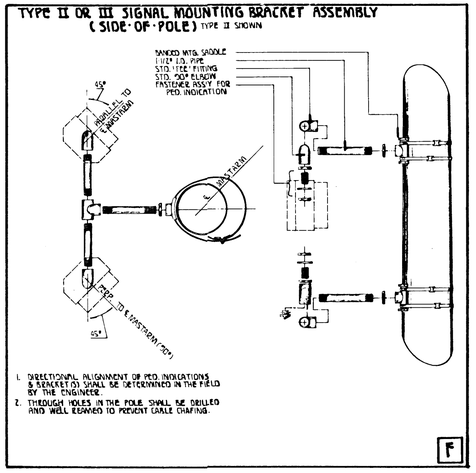

1. DIRECTIONAL ALIGNMENT OF PED. INDICATIONS & BRACKET(S) SHALL BE DETERMINED IN THE FIELD BY THE ENGINEER.
2. THROUGH HOLES IN THE POLE SHALL BE DRILLED AND WELL REAMED TO PREVENT CABLE CHAFING.

F

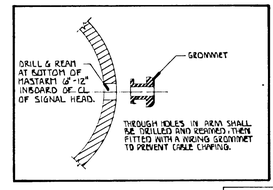

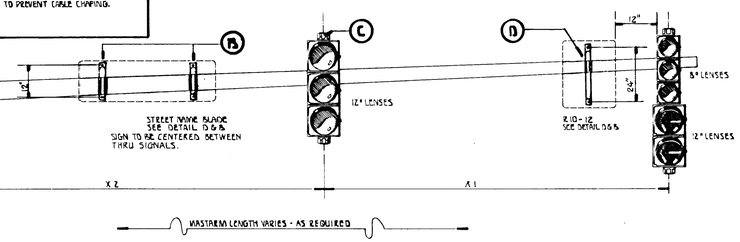

REV.	DATE	COMMENTS	INIT.
		RWP - Signature, TO UNBOLD, Bar Calculation	
		Add Cap & Cap Plate, 1 1/2 Sch.	
		Add Cap & Cap Plate TO Sheet. Bend	
		Detail of Notes	
		Change Brackets to 60 wide and Sign Text	
		Add Note "A"	
		Add Note 7	
		Change Note 2	
		Add Note 6	

REV.	DATE	COMPONENTS	INIT.
		Round Corner Box	
		Add Cap & Cap Plate	
		Add Bend	
		Add #6 Bare	

PROJECT DESCRIPTION

STEEL SIGNAL POLE ASSEMBLY DETAILS

PROJECT NUMBER

468-82138 & 472-82668

BOOK NO.	APPROVED BY	DATE AUG. 03
DRAWN BY SEAL		REVISED

CITY OF WICHITA

DEPARTMENT OF PUBLIC WORKS

DIVISION OF TRAFFIC ENGINEERING	SCALE
WM G. McKINLEY: TRAFFIC ENGINEER	