FHWA REGION NO.	STATE	PROJECT NO.	YEAR	SHEET NO.	TOTAL SHEETS
7	KANSAS	87N-0127-01	1999	27	90

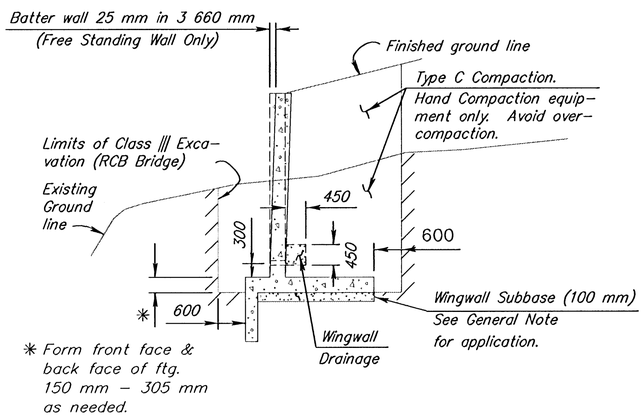

SECTION THRU WINGWALL

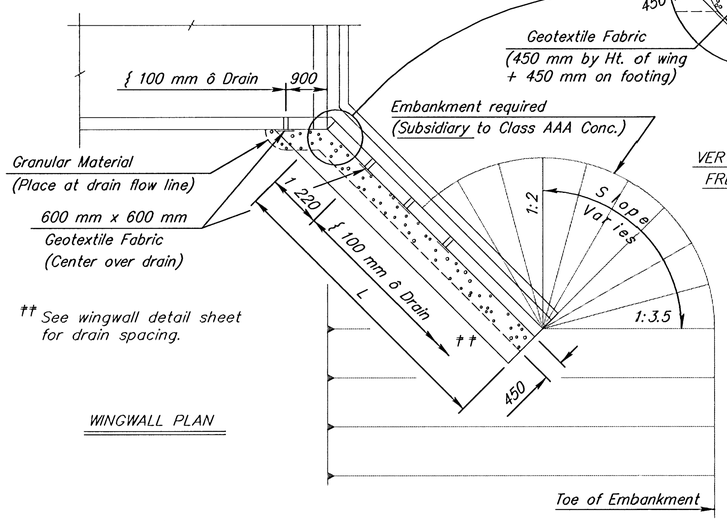

WINGWALL PLAN

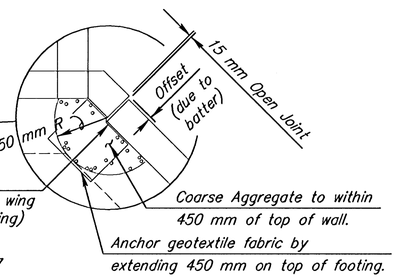

VERTICAL WINGWALL DRAINAGE FOR FREE-STANDING WINGWALLS ONLY
(RCB Rise 3.660 m & over)

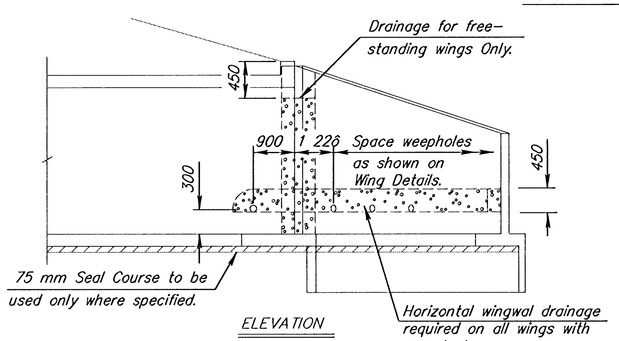

ELEVATION

ϕ Longitudinal bars shall extend through the joint to provide a minumum lap equal to the required splice length. See RCB Details Sh. for required splice length.

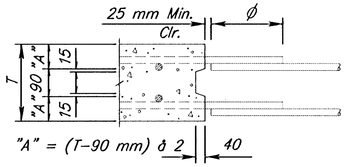

VERTICAL CONSTRUCTION JOINTS

NOTE: Vertical construction joints shall be perpendicular to the longitudinal axis of the RCB and shall be placed at any location as needed for construction and as approved by the Engineer.

NOTE: Horizontal construction joints shall be a roughened finish.

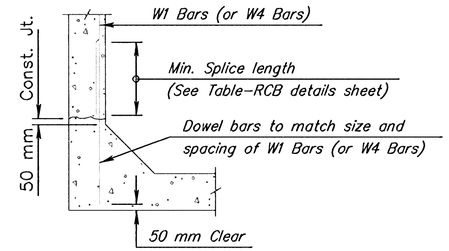

OPTIONAL BAR DETAIL

The Contractor shall have the option of using Dowel Bars to match vertical wall bars as shown, however no allowance will be made for additional steel required for bar laps.

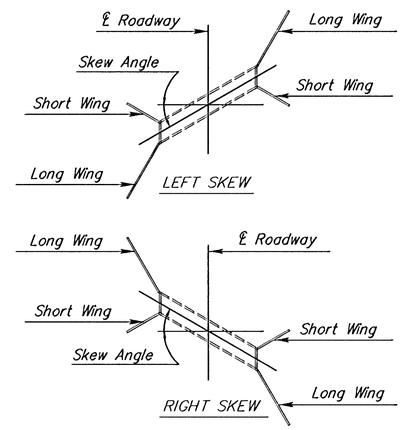

PLAN VIEW SKEWED R.C.B.

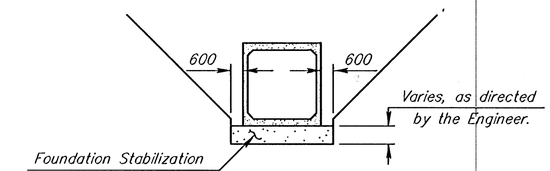

SECTION

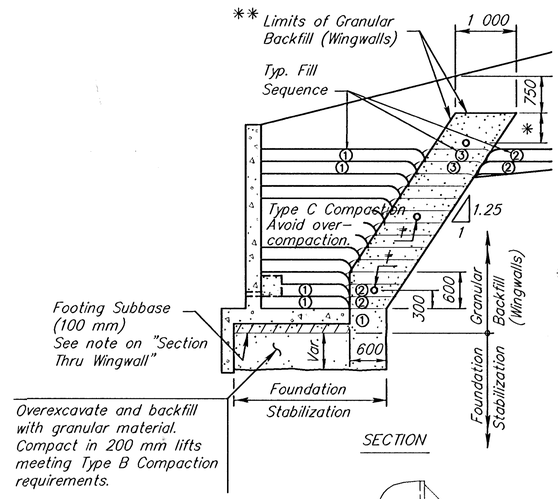

SECTION

* Omit Drain Pipe when distance is less than 600 mm.

† 100 mm Perforated Pipe (Install ea. 1 220 mm in Elev.)

** NOTE: As an alternative, all backfill for the wall (within 750 mm of finish grade) may be granular backfill material. Measurement for quantity shall be to the same limits as listed in the General Notes.

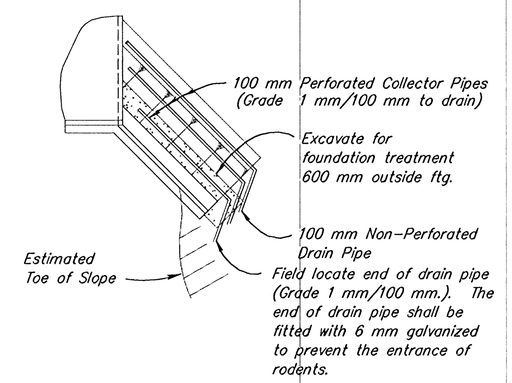

PLAN

GRANULAR BACKFILL AND FOUNDATION STABILIZATION

GENERAL NOTES

Wingwall Drainage:

1. All wingwalls with weepholes shall have horizontal wingwall drainage as shown. Free-standing wingwalls shall also have the vertical wingwall drainage.

2. Construction and materials for wingwall drainage, including weepholes, geotextile fabric and granular material, shall be subsidiary to the bid item, "Class AAA Concrete". Granular material for wingwall drainage shall conform to the requirements of UD-1. Weepholes may be a formed opening or corrugated polyethylene tubing.

Wingwall Subbase:

1. Wingwall subbase shall be constructed at all wingwall footings to assure the assumed coefficient of friction between the concrete footing and the foundation, with the following exceptions;

   a) Wingwall subbase will not be required for footings on RCB's 1.830 m or less in height unless otherwise determined by the Engineer.
   b) The subbase will also not be required for footings founded on rock or clean, granular material as determined by the Engineer.

2. Subbase shall consist of 100 mm compacted granular material consisting of commercial grade clean sand or UD-1 material. All excavation, material and labor necessary to construct the wingwall subbase shall be subsidiary to "Class AAA Concrete".

Seal Course:

1. Seal Course consisting of 75 mm minimum of Commercial Grade Concrete shall be constructed to the limits directed by the Engineer. No reinforcing in the floor of the slab or wall footing shall be placed until the Seal Course has gained sufficient strength to permit working upon it without injury.

GENERAL NOTES

Foundation Stabilization:

1. At sites where the wingwall footing or culvert floor is located within the limits of an existing streambed or is founded on unsuitable material, the Engineer will determine the depth of Foundation Stabilization.

2. Foundation Stabilization may be required under the box and/or wingwalls as directed by the Engineer. The granular material placed for foundation stabilization shall be measured and paid for at the contract price per cubic yard for "Foundation Stabilization". Material for Foundation Stabilization shall be suitable backfill material as approved by the Engineer. The excavation for the placement of granular material shall be subsidiary to the bid item, "Foundation Stabilization".

Granular Backfill (Wingwalls):

1. In locations where the material behind the wingwall consist of soils judged as high plastiscity clays, fat clays, expansive clays or organic clays, Granular Backfill (Wingwalls) shall be used. Granular Backfill construction may be used separately or combined witn Foundation Stabilization as directed by the Engineer.

2. Measurement for the bid item, "Granular Backfill (Wingwalls)", shall be measured in mæ to the theoretical limits as shown Drainage pipe, rodent screens, and excavation shall be subsidiary to the bid item, "Granular Backfill (Wingwalls)".

3. Material for Granular Backfill (Wingwalls) shall conform to the requirements of UD-1 or BD-1. Drainage Pipe shall be corrugated polyethylene tubing conforming to KDOT Specifications.

NO.	DATE	REVISIONS	BY	APP'D
1	10-2-91	Change drainage details	RAM	KFH

KANSAS DEPARTMENT OF TRANSPORTATION

RCB AUXILIARY DETAILS

BR020SI

FHWA APPROVAL			10-09-91	APP'D		KENNETH F. HURST	
DESIGNED	RAM	DETAILED	RDR	QUANTITIES		TRACED	
DESIGN CK.	RRR	DETAIL CK.	RRR	QUAN.CK.		TRACE CK.	