FHWA REGION NO.	STATE	PROJECT NO.	YEAR	SHEET NO.	TOTAL SHEETS
7	KANSAS		1989		

TRAFFIC CONTROL SIGNS & SIGN POSTS

Station	Location from ℄	Classification - Each							Sign Post Length	
		R1-1	S-1	R2-1	R3-7R	R8-3a	①	②	Breakaway Length 1¾" x 1¾" x Varies	"U" Channel
Total										

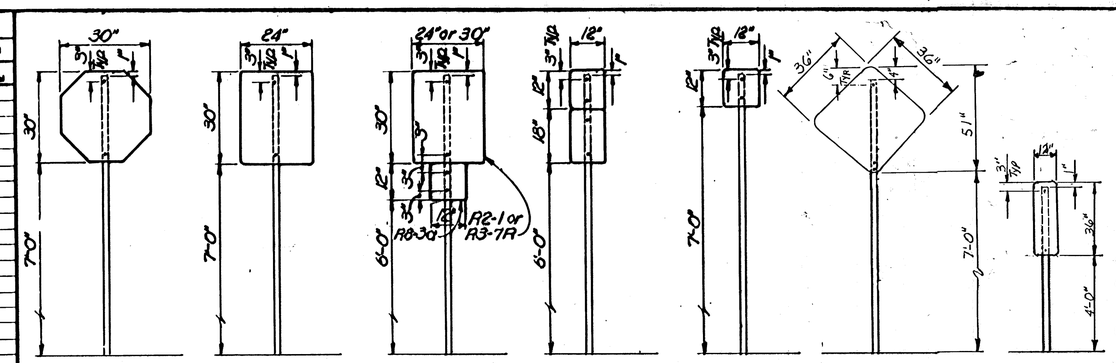

SIGN MOUNTING DETAILS

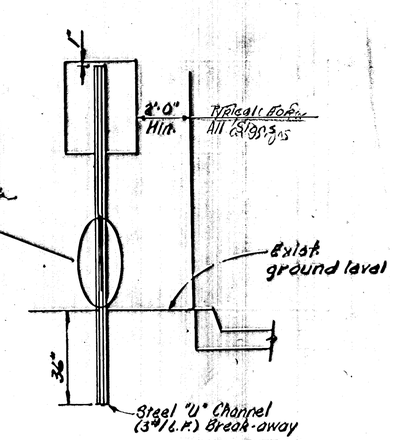

TRAFFIC SIGN INSTALLATION DETAIL

SIGN POST LENGTH SUMMARY	
BREAKAWAY SIGN POST: 1¾"x1¾" x Varies	
LENGTH	TOTAL # POSTS
9'	
2¼" x 2¼" x 18"	
2" x 2" x 36"	
U-CHANNEL	
LENGTH	TOTAL # POSTS
Stubs 3'	
Posts 8'	
Posts 9'	
Posts 9-1/2'	
Posts 11'	
Straps & Bolts	

RECAPITULATION OF MATERIALS		
ITEMS	TOTAL	UNIT
Sign Face, High Intensity HA Reflective Sheeting)		S.F.
Steel "U" Channel Sign Post		L.F.
Breakaway Sign Post, 1¾"x1¾"x Varies		L.F.
Breakaway Anchorsleeve, 2¼"x2¼"x18"		L.F.
Breakaway Sign Post Anchor, 2"x2"x36"		L.F.

SUMMARY OF QUANTITIES		
BID ITEMS	TOTAL	UNIT
Signing	Lump Sum	L.S.

SIGN DESCRIPTION

CLASSIFICATION	TYPE	PROCESS	SIZE	AREA
R1-1	STOP SIGN	REVERSE SCREEN	30" x 30"	5.18 SQ. FT.
R3-7R	RT. LANE MUST TURN RT.	DIRECT SCREEN	30" x 30"	6.25 SQ. FT.
R8-3a	NO PARKING	DIRECT SCREEN	12" x 12"	1.00 SQ. FT.
R2-1	SPEED LIMIT	DIRECT SCREEN	24" x 30"	5.00 SQ. FT.
①	SNOW EMERGENCY ROUTE	DIRECT SCREEN	12" x 18"	1.50 SQ. FT.
②	NO PARKING/BUS STOP	DIRECT SCREEN	12" x 24"	2.00 SQ. FT.
S-1	NO LT. TURN AT KELLOGG	DIRECT SCREEN	24" x 36"	6.00 SQ. FT.

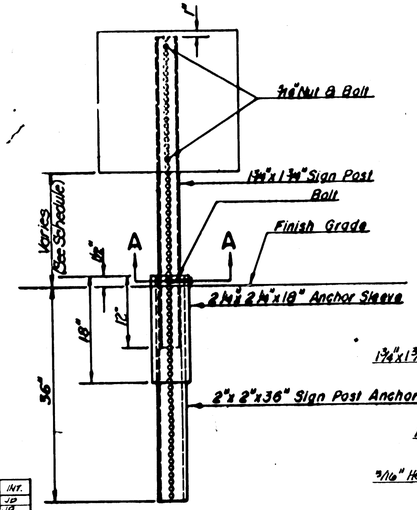

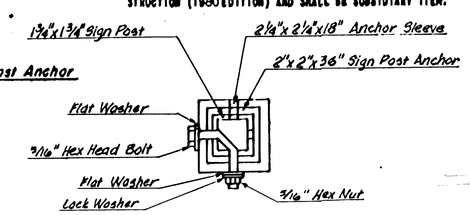

SECTION A-A

BREAK-AWAY SIGN POST DETAIL

PAVEMENT INSTALLATION SEQUENCE

1. SIGN POST ANCHOR DRIVEN INTO SUBGRADE PRIOR TO THE PLACEMENT OF THE PAVEMENT.
2. ANCHOR SLEEVE DRIVEN INTO SUBGRADE OVER THE SIGN POST ANCHOR PRIOR TO THE PLACEMENT OF THE PAVEMENT.
3. INSERT SIGN POST INTO THE SIGN POST ANCHOR AND BOLT IN PLACE.

GROUND INSTALLATION SEQUENCE

1. SIGN POST ANCHOR DRIVEN INTO THE GROUND.
2. ANCHOR SLEEVE DRIVEN INTO THE GROUND OVER THE SIGN POST ANCHOR.
3. INSERT SIGN POST INTO THE SIGN POST ANCHOR AND BOLT IN PLACE.

NOTE: IN ALL INSTALLATIONS THE FIRST HOLE ABOVE THE FINISHED GRADE LEVEL IN ALL THREE UNITS MUST BE IN LINE FOR INSERTION OF THE BOLT.

ALL BOLTS AND NUTS FOR FASTENING THE SIGNS AND SIGN POST ASSEMBLY SHALL COMPLY WITH SECTION 1614 AND ALL WASHERS SHALL COMPLY WITH SECTION 1614 OF THE STANDARD SPECIFICATION FOR STATE ROAD AND BRIDGE CONSTRUCTION (1980 EDITION) AND SHALL BE SUBSIDIARY ITEM.

NOTE: ALL LETTER, NUMBER & SYMBOL SIZES, SPACING & COLORS AND THE SIGN COLORS SHALL CONFORM TO THE CURRENT "MANUAL ON UNIFORM TRAFFIC CONTROL DEVICES."

ALL SIGN MATERIAL TO BE 0.080" ALUMINUM.

REV. DATE	COMMENTS	INT.
JUN 89	REV. & ADD BREAKAWAY SIGN DETAILS - BRK BOLT	JD
FEB. '10	REV. BREAKAWAY SIGN DETAIL - BRK BOLT	JD

WICHITA, KANSAS

SOUTH SENECA IMPROVEMENTS
48TH. TO MACARTHER (PHASE I)

SIGNING DETAILS

JOB NO. | DATE: | CHKD: | SCALE: None | DRAWN: | APPVD: | SH. 17 of 41