MASTARM MOUNTING DETAIL

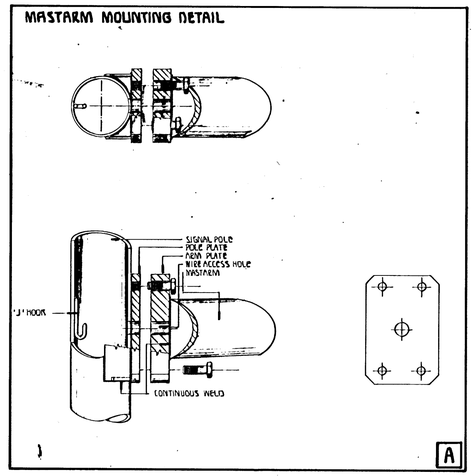

BANDED SIGN MOUNTING BRACKET DETAIL

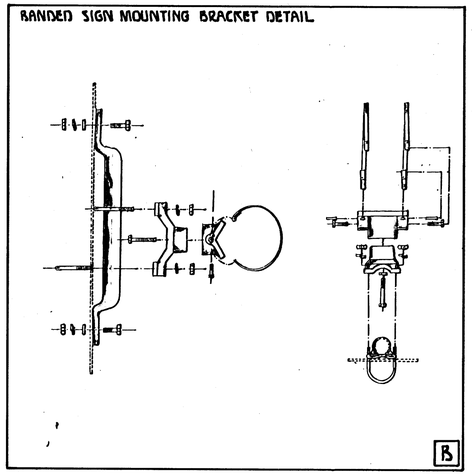

TYPE I SIGNAL MOUNTING BRACKET ASSEMBLY DETAIL

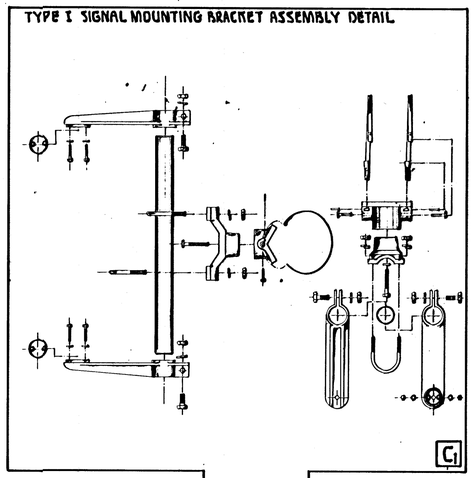

STANDARD SIGNING

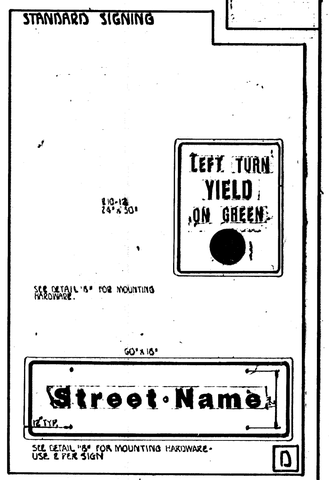

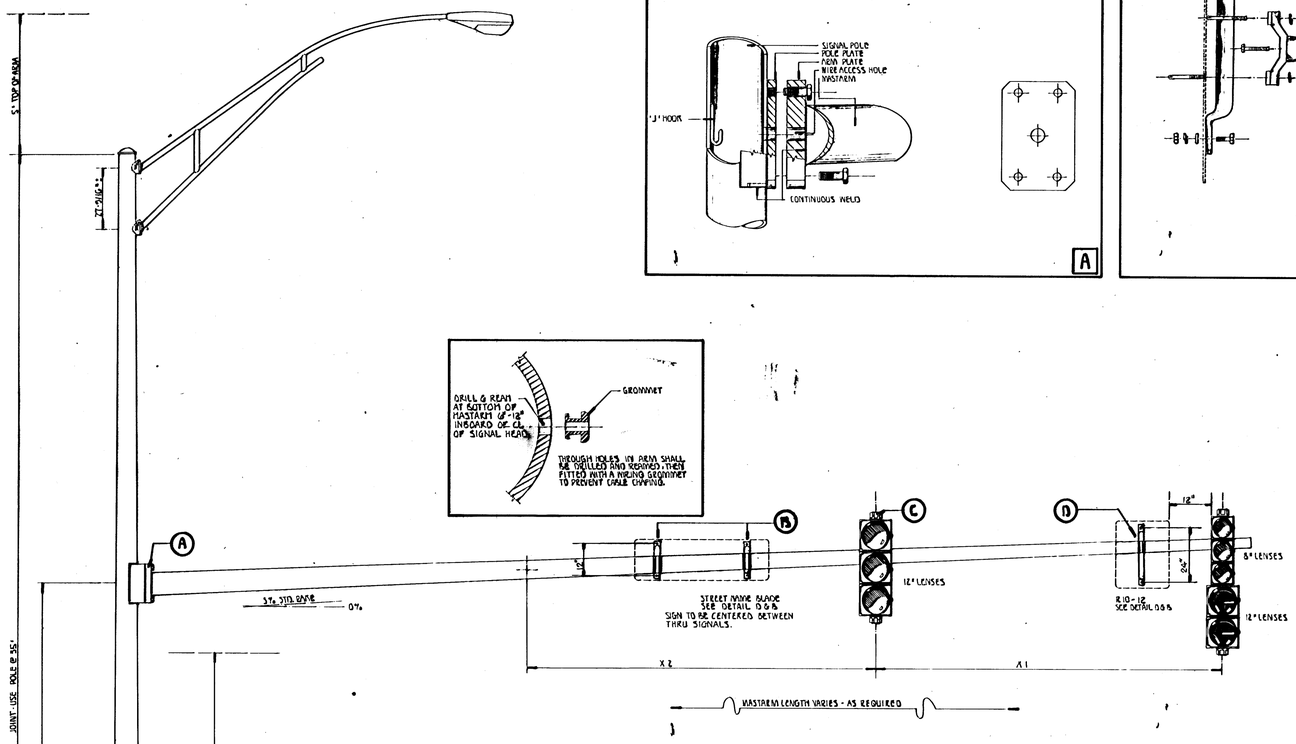

PEDESTRIAN PUSHBUTTON/SIGN UNIT DETAIL

*NOTE: MESSAGE TO BE CAST WITH HOUSING (ONE PIECE).

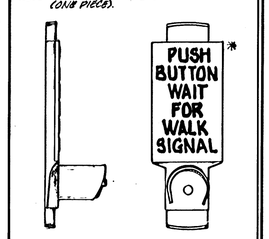

POLE BASE ASSEMBLY DETAIL

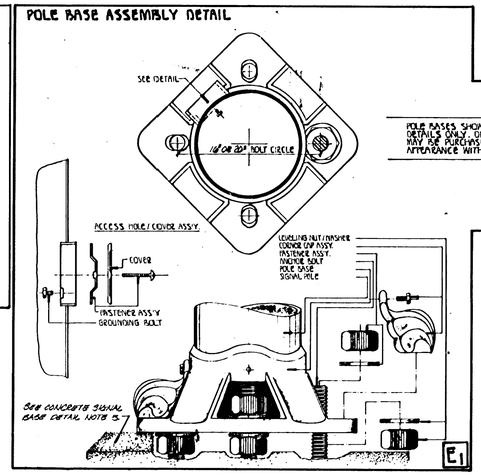

POLE BASES SHOWN ARE FOR ASSEMBLY DETAILS ONLY. OPTIONAL BASES THAT MAY BE PURCHASED MAY VARY IN ACTUAL APPEARANCE WITH MFG. CO.

POLE BASE ASSEMBLY DETAIL (ALTERNATE)

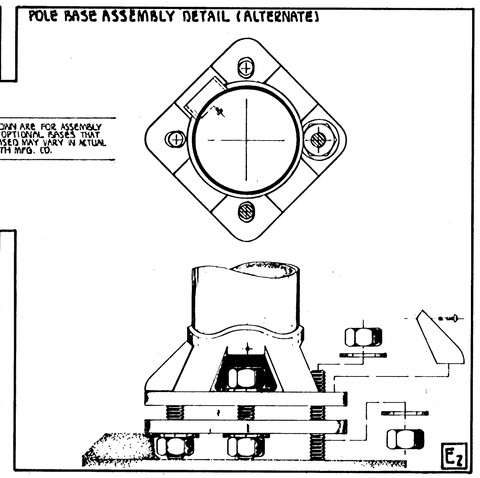

TYPE I SIGNAL MOUNTING BRACKET (ALTERNATE)

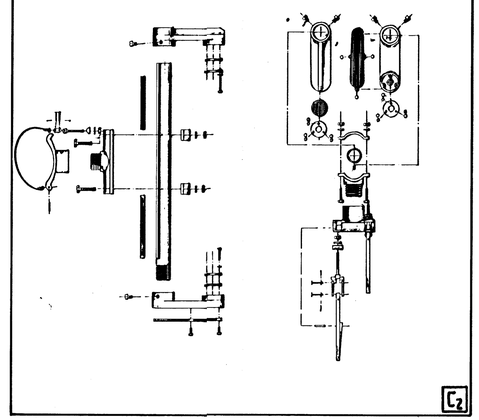

TYPE II OR III SIGNAL MOUNTING BRACKET ASSEMBLY (SIDE-OF-POLE) TYPE II SHOWN

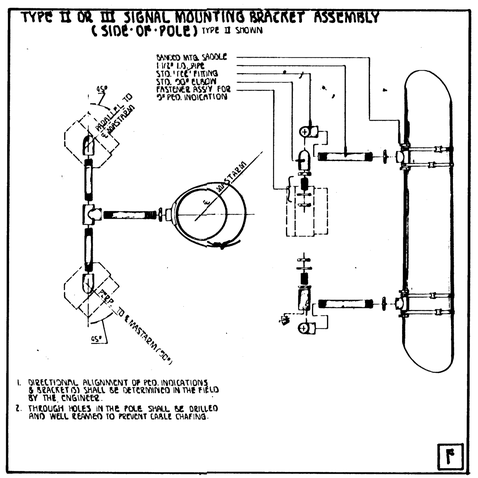

1. DIRECTIONAL ALIGNMENT OF PED. INDICATIONS & BRACKETS SHALL BE DETERMINED IN THE FIELD BY THE ENGINEER.
2. THROUGH HOLES IN THE POLE SHALL BE DRILLED AND WELL REAMED TO PREVENT CABLE CHAFING.

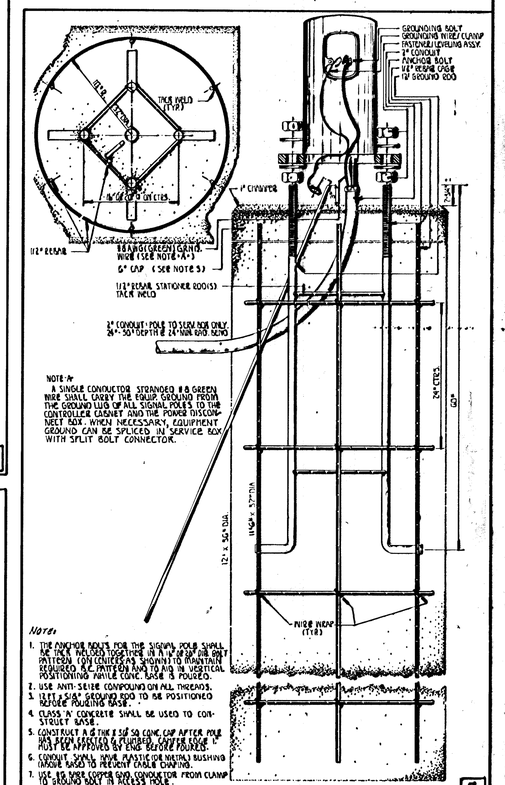

NOTE "A"
A SINGLE CONDUCTOR STRANDED #8 GREEN WIRE SHALL CARRY THE EQUIP. GROUND FROM THE GROUND LUG OF ALL SIGNAL POLES TO THE CONTROLLER CABINET AND THE POWER DISCONNECT BOX. WHEN NECESSARY, EQUIPMENT GROUND CAN BE SPLICED IN SERVICE BOX WITH SPLIT BOLT CONNECTOR.

NOTES:
1. THE ANCHOR BOLTS FOR THE SIGNAL POLE SHALL BE ONE WELDED TOGETHER IN A "J" OR "L" OR ONE BOLT PATTERN, CONTERED AS SHOWN TO MAINTAIN REQUIRED BOLT PATTERN AND TO ADJ. IN VERTICAL POSITIONING PRIOR CONC. BASE IS POURED.
2. USE ANTI-SEIZE COMPOUND ON ALL THREADS.
3. 1 5/8"x 8' GROUND ROD TO BE POSITIONED BEFORE POURING BASE.
4. CLASS 'A' CONCRETE SHALL BE USED TO CONSTRUCT BASE.
5. CONSTRUCT A 6" THICK SQ. CONC. CAP AFTER POLE HAS BEEN ERECTED & PLUMBED. CAPTER EDGE 1" MUST BE APPROVED BY ENG. BEFORE POURED.
6. CONDUIT SHALL HAVE PLASTIC (OR METAL) BUSHING AROUND WIRES TO PREVENT CABLE CHAFING.
7. USE #8 THRU COPPER GRD. CONDUCTOR FROM CLAMP TO GROUND ROD IN ACCESS HOLE.

CONCRETE SIGNAL BASE DETAIL

PROJECT DESCRIPTION		
STEEL SIGNAL POLE ASSEMBLY DETAILS		
PROJECT NUMBER		
BOOK NO.	APPROVED BY	DATE AUG. 63
DRAWN BY SEAL		REVISED
CITY OF WICHITA DEPARTMENT OF PUBLIC WORKS		20 41
DIVISION OF TRAFFIC ENGINEERING WM. G. McKINLEY, TRAFFIC ENGINEER		SCALE

SCH. DATE	COMMENTS	INIT.	SCH. DATE	COMMENTS	INIT.	SCH. DATE	COMMENTS	INIT.
SEPT. 63	REVISED TO INCORPORATE NEW CONDUIT & GROUNDING							
SEPT. 63	REVISED TO INCORPORATE NEW CONDUIT & GROUNDING							
DEC. 63	REVISED BASE DETAIL & ADDED WIRE TO SHARE WIRE							
FEB. 64	REVISED TO ADD NOTE							
MAR. 64	REVISED NOTE & ADDED WIRE & GROUND ROD							
MAR. 64	REVISED NOTE TO ADD GROUND ROD							
MAY 64	REVISED TO ADD NOTE							
JULY 64	REVISED TO ADD NOTE							
DEC. 66	REVISED TO ADD NOTE							
FEB. 67	REVISED TO ADD NOTE							
MAY 69	ADDED TWO MOUNTING HOLES							