FHWA REGION NO.	STATE	PROJECT NO.	FISCAL YEAR	SHEET NO.	TOTAL SHEETS
7	KANSAS	87TE-0040-01	1997	23	33

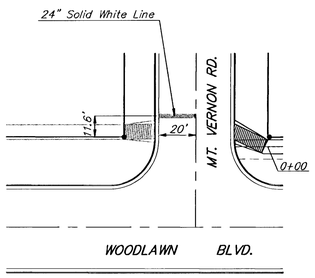

MT. VERNON AND WOODLAWN BLVD.

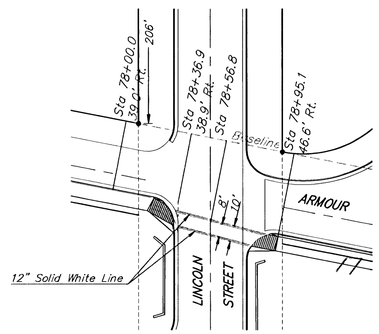

LINCOLN AND ARMOUR STREET

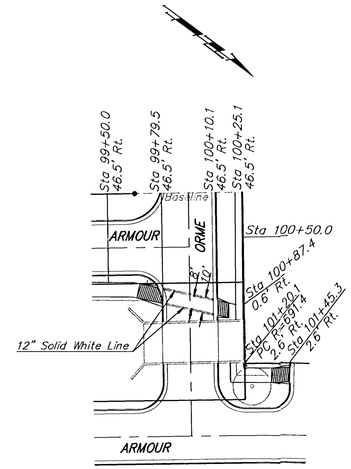

ORME AND ARMOUR STREET

BILL OF MATERIALS		
ITEM	TOTAL	UNITS
12" COLD PLASTIC MARKING (WHITE)	475	L.F.
24" COLD PLASTIC MARKING (WHITE)	20	L.F.

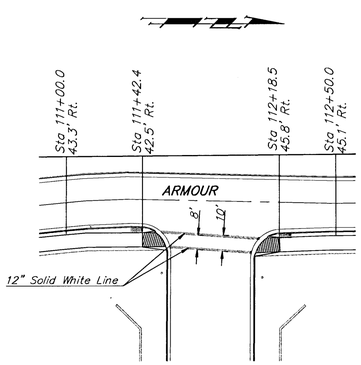

ARMOUR DRIVE

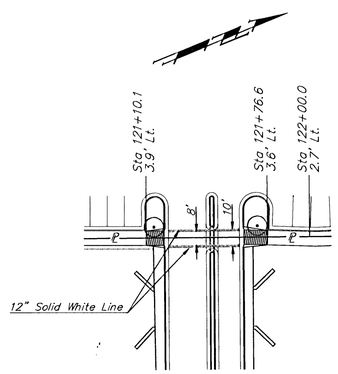

TARGET ENTRANCE AT ARMOUR DRIVE

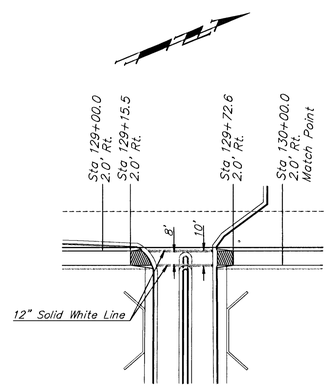

ARMOUR DRIVE

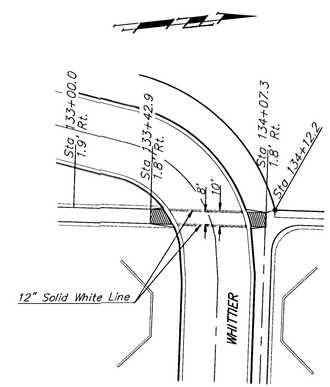

WHITTIER STREET

Revised 5/8/97 DMV

GYPSUM CREEK BICYCLE PATH
PAVEMENT MARKING

BAUGHMAN COMPANY P. A.
ENGINEERING & SURVEYING
316/262-7271 • 315 ELLIS • WICHITA, KANSAS 67211

PROJECT NUMBER	SHEET
472-82573	23 OF 33

DESIGN	DRAWN	UTIL. CHECK'D	DATE	SCALE
TA/DMV	DMV		11-16-95	None

SZ-10-E030

019/PMARK