PROJECT NO.		SHEET NO.	TOTAL SHEETS
472-83247	87-1E-0159-01	8	24

SCALE: 1"=20'

℄ CURVE ALIGNMENT DATA

CURVE	℄ ARC LENGTH	RADIUS	DELTA	PC NORTHING	PC EASTING	STATION	PI NORTHING	PI EASTING	STATION	PT NORTHING	PT EASTING	STATION
C-38	52.13	700.00	4°16'00"	1,690,437.29	1,634,986.55	82+47.34, 36.11'Rt.	1,690,415.44	1,635,006.66	82+77.00, 35'Rt.	1,690,391.97	1,635,024.84	83+06.67, 36.28'Rt.
C-39	44.97	1000.00	2°34'36"	1,690,275.07	1,635,115.40	84+54.39, 42.98'Rt.	1,690,257.18	1,635,129.26	84+77.00, 44'Rt.	1,690,239.93	1,635,143.92	84+99.64, 44'Rt.
C-40	45.80	1000.00	2°37'27"	1,690,151.18	1,635,219.33	86+16.10 44'Rt.	1,690,133.73	1,635,234.16	86+39.00, 44'Rt.	1,690,116.97	1,635,249.78	86+61.88, 42.95'Rt.
C-41	65.52	700.00	5°21'45"	1,689,981.95	1,635,375.61	88+46.25 34.50'Rt.	1,689,957.97	1,635,397.96	88+79.00, 33'Rt.	1,689,932.00	1,635,417.97	89+11.74, 34.57'Rt.
C-42	58.65	500.00	5°36'02"	1,689,798.83	1,635,520.60	90+79.69 42.60'Rt.	1,689,775.58	1,635,538.52	91+09.00, 44'Rt.	1,689,754.20	1,635,558.62	91+38.31, 42.53'Rt.

SW 1/4 Sec. 13, T27S, R1W

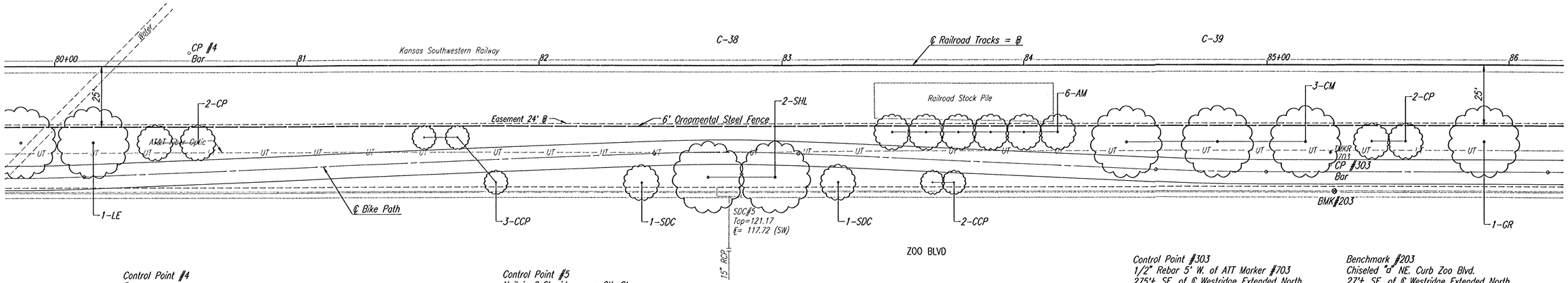

Control Point #4
Bar
Sta. 80+55.54, .47 Lt.
N= 1,690,610.368, E= 1,634,894.035
Elev.= 122.61

Control Point #5
Nail in ℄ Sheridan near 8th St.
Sta. 89+00.82, 104.13' Lt.
N= 1,690,636.906, E= 1,636,230.589
Elev.= 122.61

Control Point #303
1/2" Rebar 5' W. of ATT Marker #703
275'± SE. of ℄ Westridge Extended North
12'± NE. of NE. Curb Zoo Blvd.
Sta. 85+26.04, 41.07' Rt.
N= 1,690,221.703, E= 1,635,163.252
Elev.= 121.02

Benchmark #203
Chiseled "a" NE. Curb Zoo Blvd.
27'± SE. of ℄ Westridge Extended North
Near ATT Marker #703
Sta. 85+28, 52' Rt.
Elev.= 120.57

SCALE: 1"=20'

SW 1/4 Sec. 13, T27S, R1W

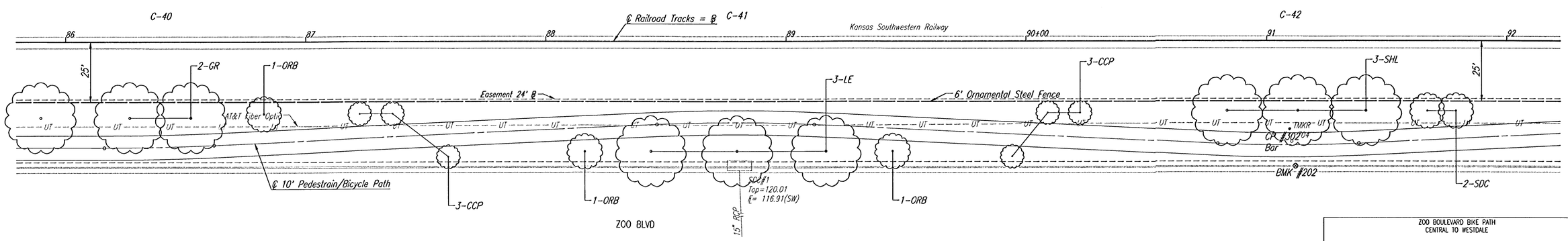

Control Point #302
1/2" Rebar 5' W. of ATT Marker #704
250'± SE. of ℄ Joann Extended North
12'± NE. of NE. Curb of Zoo Blvd.
Sta. 91+10.36, 41.77' Rt.
N= 1,689,775.989, E= 1,635,541.096
Elev.= 119.89

Benchmark #202
Chiseled "a" NE. Curb Zoo Blvd. 250'± SE.
of ℄ Joann Extended North
Sta. 91+12, 52' Rt.
Elev.= 119.61

ZOO BOULEVARD BIKE PATH
CENTRAL TO WESTDALE

ZOO BOULEVARD

STA. 80+00.00 TO STA. 92+00.00

Professional Engineering Consultants, P.A.
303 S. TOPEKA • WICHITA, KANSAS 67202
316-262-2691 • FAX 316-262-3003

Designed by	RMH	Checked by	
Drawn by	DEP, SAD	Date SEPTEMBER 2001	Job No. 96450-002

DSNR: SAD OPER: SAD SCALE: 1=20.00
C:\1996\96450\002\SW80-92 02-04-2003 08:51:27 am