PROJECT NO.		SHEET NO.	TOTAL SHEETS
472-83247	87-TE-0159-01	9	24

SCALE: 1"=20'

℄ CURVE ALIGNMENT DATA

CURVE	℄ ARC LENGTH	RADIUS	DELTA	PC NORTHING	PC EASTING	STATION	PI NORTHING	PI EASTING	STATION	PT NORTHING	PT EASTING	STATION
C-43	57.46	600.00	5°29'12"	1,689,621.42	1,635,683.39	93+20.29, 33.44'Rt.	1,689,600.47	1,635,703.08	93+49.00, 32'Rt.	1,689,577.73	1,635,720.67	93+77.72, 33.32'Rt.
C-44	55.25	400.00	7°54'51"	1,689,432.35	1,635,833.17	95+61.36, 41.73'Rt.	1,689,410.46	1,635,850.11	95+89.00, 44'Rt.	1,689,391.12	1,635,869.89	96+16.55, 40.45'Rt.
C-45	62.67	500.00	7°10'55"	1,689,356.58	1,635,905.23	96+65.76, 35.89'Rt.	1,689,334.64	1,635,927.67	96+97.00, 33'Rt.	1,689,310.07	1,635,947.18	97+28.36, 34.04'Rt.
C-46	59.12	700.00	4°50'21"	1,689,096.93	1,636,116.52	100+00.44, 43.02'Rt.	1,689,073.77	1,636,134.92	100+30.00, 44'Rt.	1,689,052.24	1,636,155.21	100+59.54, 42.48'Rt.
C-47	33.63	500.00	3°51'12"	1,688,940.27	1,636,260.74	102+13.20, 34.57'Rt.	1,688,928.03	1,636,272.28	102+30.00, 33.70'Rt.	1,688,915.05	1,636,282.97	102+46.82, 33.97'Rt.
C-48	39.20	200.00	11°13'49"	1,688,879.89	1,636,311.90	102+90.34, 34.69'Rt.	1,688,864.71	1,636,324.39	103+12.00, 35'Rt.	1,688,852.25	1,636,339.60	103+31.35, 31.48'Rt.
C-49	30.21	100.00	17°18'37"	1,688,833.78	1,636,362.16	103+60.02, 26.25'Rt.	1,688,823.74	1,636,374.19	103+75.00, 23.52'Rt.	1,688,811.42	1,636,382.31	103+90.11, 25.37'Rt.

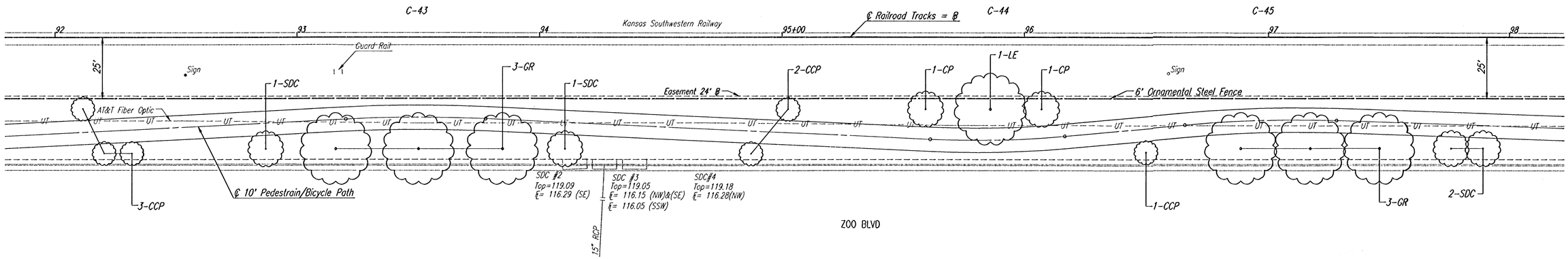

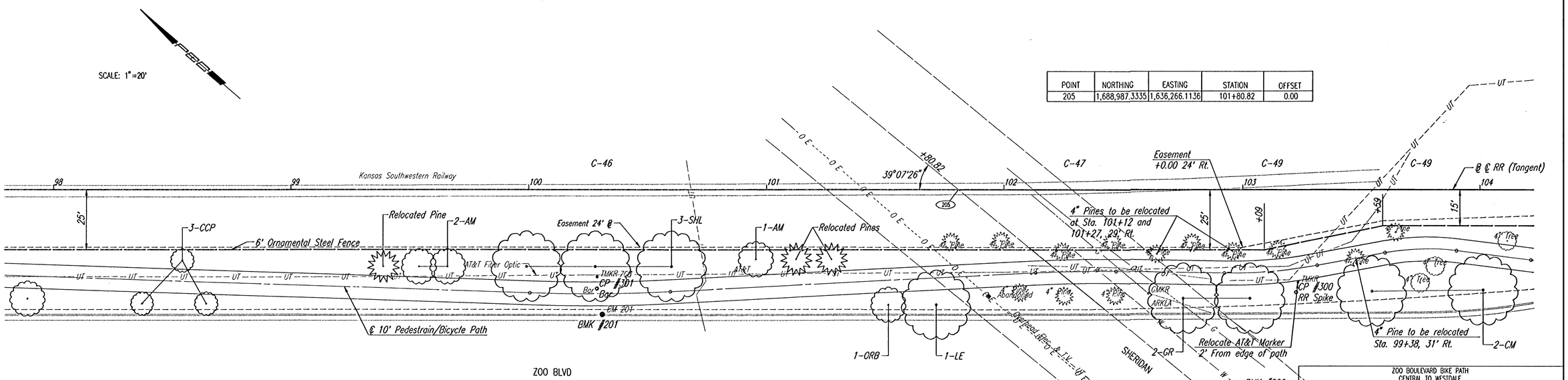

POINT	NORTHING	EASTING	STATION	OFFSET
205	1,688,987.3335	1,636,266.1136	101+80.82	0.00

Control Point #301
1/2" Bar 5' W. of ATT Marker #705
across from N. entrance Zoo Blvd Apts.
Sta. 100+28.67, 41.20' Rt.
Elev.= 120.81
N- 1,689,076.595, E- 1,636,136.193

Benchmark #201
Chiseled "a" NE. Curb Zoo Blvd.
near ATT Marker #705 across
from N. Drive Zoo Blvd. Apts.
Sta. 100+31, 52' Rt.
Elev.= 120.45

Control Point #300
RR Spike W. of Tracks
150'± N. of Central
5' W. of ATT Marker #706
Sta. 103+22.46, 42.70' Rt.
Elev.= 121.85
N- 1,688,851.750, E- 1,636,325.293

Benchmark #200
Chiseled "a" N. end median
150'± N. of Central Ave.
43' WSW of ATT Marker #706
Sta. 103+20, 81' Rt.
Elev.= 121.75

ZOO BOULEVARD BIKE PATH
CENTRAL TO WESTDALE

ZOO BOULEVARD

STA. 92+00.00 TO STA. 104+00.00

Professional Engineering Consultants, P.A.
303 S. TOPEKA • WICHITA, KANSAS 67202
316-262-2691 • FAX 316-262-3003

Designed by	RMH	Checked by	
Drawn by	DEP, SAD	Date SEPTEMBER 2001	Job No. 96450-002

DSNR: SAD OPER: SAD SCALE: 1=20.00
Q:\1996\96450\002\SW92-104 09-04-2002 09:09:47 am