Loop Construction/Installation Details

Typical Conventional Loop Installation

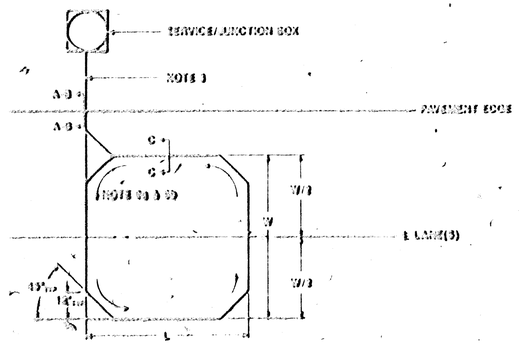

Typical Quadrapole Loop Installation

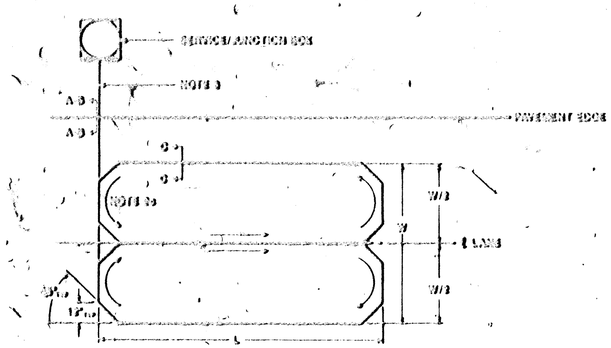

Typical Microloop Installation

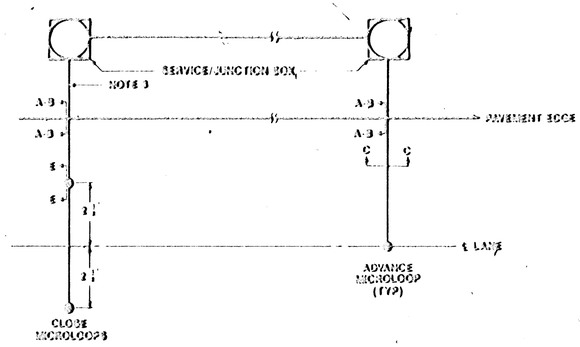

Detail A - No Curb & Gutter

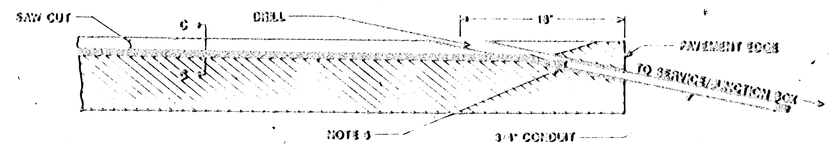

Detail B - Full Curb & Gutter

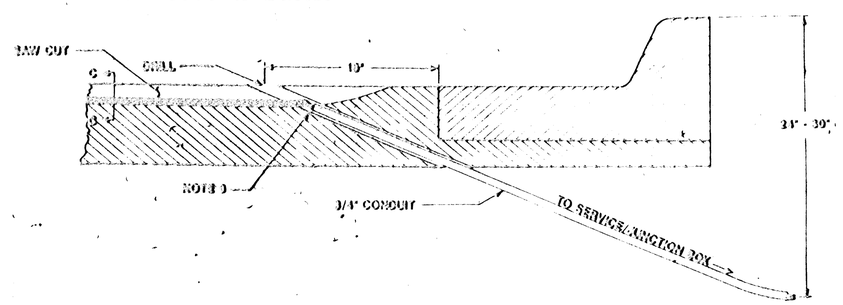

Detail C - Saw Cut

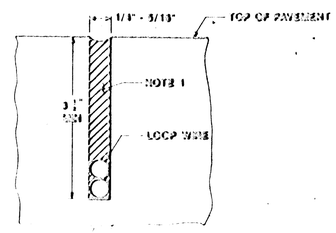

Detail D - Pavement Joint Crossing

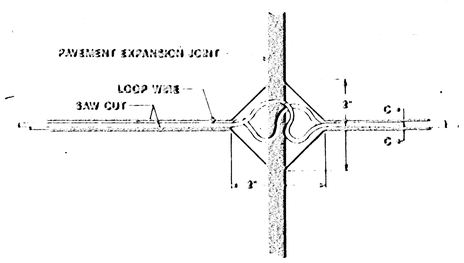

NOTE: The depth of area removed shall be the same as the saw cut depth and sealed in the same manner.

Detail E - Microloop Installation

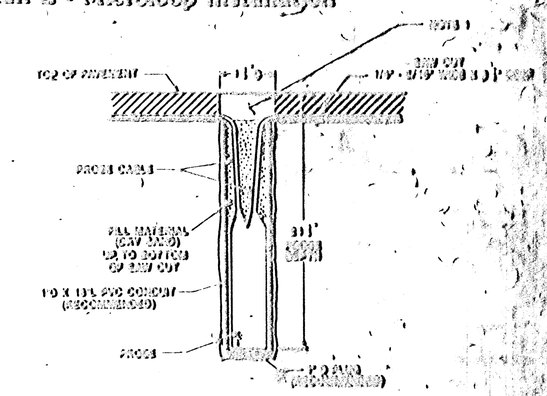

NOTES:

1. Loop saw cut and top of interface hole shall be filled with approved sealant to within 1/8" of pavement surface.
2. All loops shall be wound in the same direction.
3. Loop wire between the loop and the service/junction box shall [illegible] 3 turns per foot.
4. No expansion joint in the pavement or curb & gutter shall be within 10' of the placement of loop wire [illegible] specified.
5. The loop wire shall not pass through the curb & gutter or edge of pavement to any part of any other property and/or surface utility.
6. All conduit ends shall be sealed with dust seal to prevent loop sealant from entering conduit.
7. Loop feeder conduit shall be a minimum of 18" from any other loop feeder conduit.
8. Saw cuts running parallel with expansion joint or any other saw cut shall be a minimum of 18" apart.
9. a. Loops 35' or less - 4 turns
   b. Loops over 35' - 3 turns
   c. Quadrapole loops - 2-1-2 turns
10. The loop wire shall have 3" slack at all crossings of pavement joints to allow for expansion/contraction of pavement. - Detail D.

DATE	COMMENTS	INIT.

LOOP CONSTRUCTION
CONSTRUCTION & INSTALLATION DETAILS

472 TG 245 81858 000 000 001

SCALE: NONE | DRAWN BY: | CHECKED BY:

CITY OF WICHITA
DEPARTMENT OF PUBLIC WORKS
TRAFFIC ENGINEERING SECTION

Sheet 11 of 16