NOTE:

1. 2" x 2" Structural Steel (ANGLE IRON) Triangle to be bolted in place at the time the support structure is set in the concrete base so as to provide for horizontal and vertical positioning and leveling control of the pole support structure

REMOVABLE HOIST BRACKET DETAIL

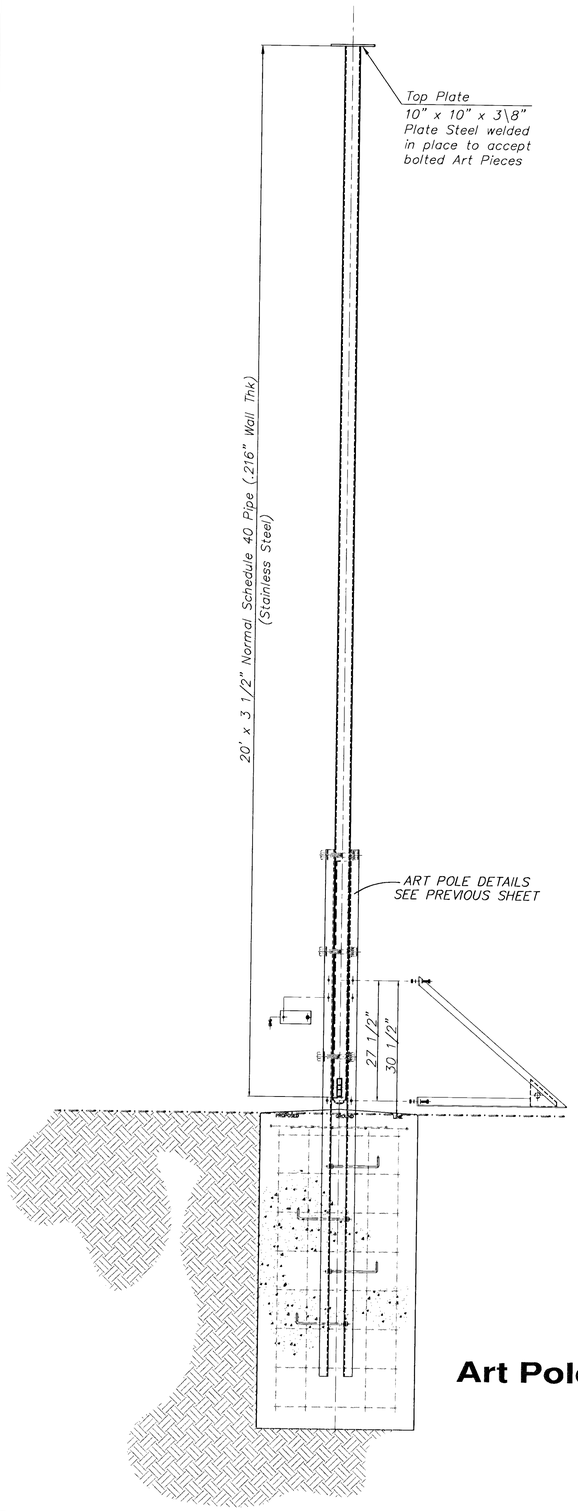

Art Pole

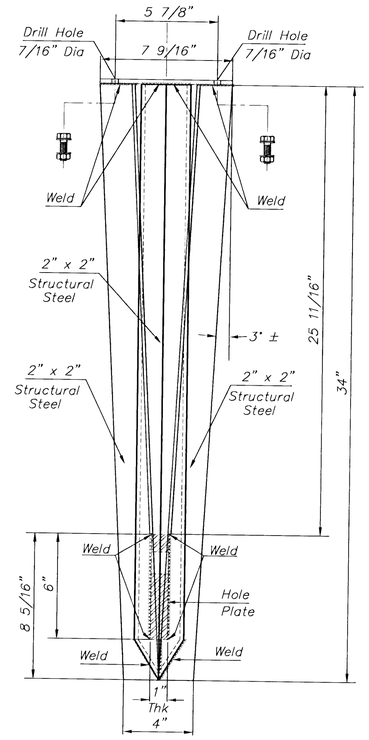

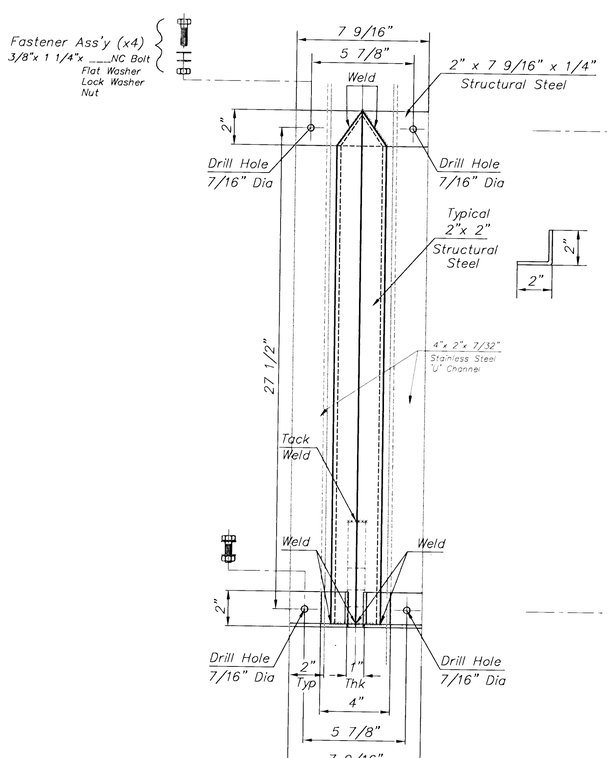

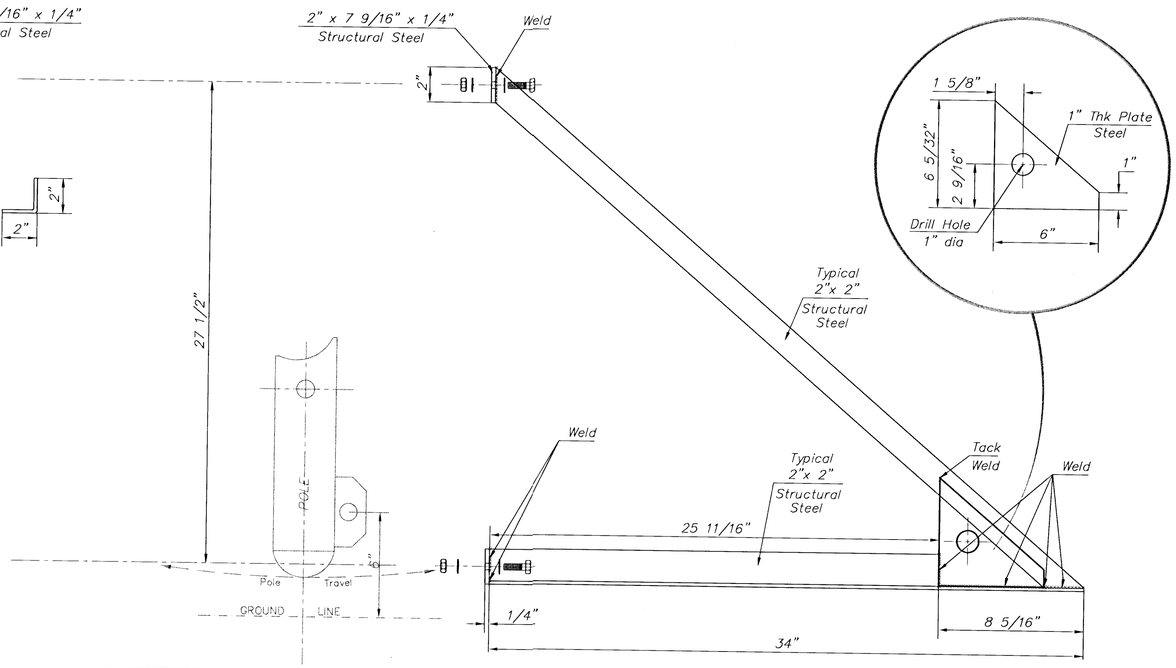

DESIGN	DATE	CITY PROJECT NUMBER	BAUGHMAN PROJECT NUMBER
STAFF	AUG 00		98-01-E965
DRAWN	SCALE	APPROVED	DIRECTORY
STAFF	NONE	JFB	F:\MCLNINT\LSCAPE
			SHEET NAME
			ARTPOL2.DWG

CAPITAL IMPROVEMENT PROJECT
ART POLE DETAILS
HOIST BRACKET PLAN
CENTRAL AVE & ZOO BLVD INTERSECTION IMPROVEMENTS

BAUGHMAN COMPANY P. A.
ENGINEERING, SURVEYING, & PLANNING
316-262-7271 • 315 ELLIS • WICHITA, KANSAS 67211

SHEET 8 OF 8

03-03-00-01