FHWA REGION NO.	STATE	PROJECT NO.	YEAR	SHEET NO.	TOTAL SHEETS
7	KANSAS	87N-0064-01	1997	42D	130

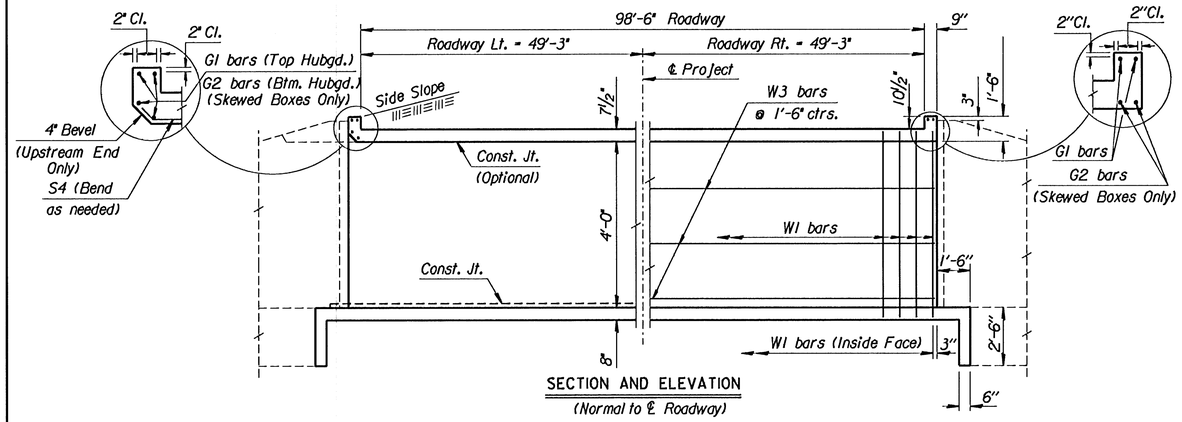

SECTION AND ELEVATION
(Normal to ℄ Roadway)

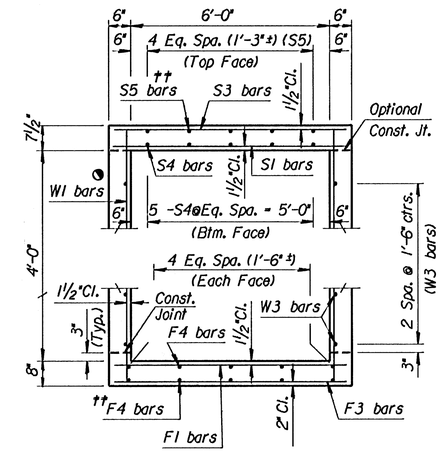

TYPICAL SECTION

See RCB Auxillary Details for Optional Splice.

Note:
S3 bars omitted unless grade box or slab thickness is greater than or equal to 12".

Note:
F3 bars omitted unless floor thickness is greater than or equal to 12".

†† Omit S5 bars when S3 bars are omitted and omit the bottom layer of F4 bars when F3 bars are omitted.

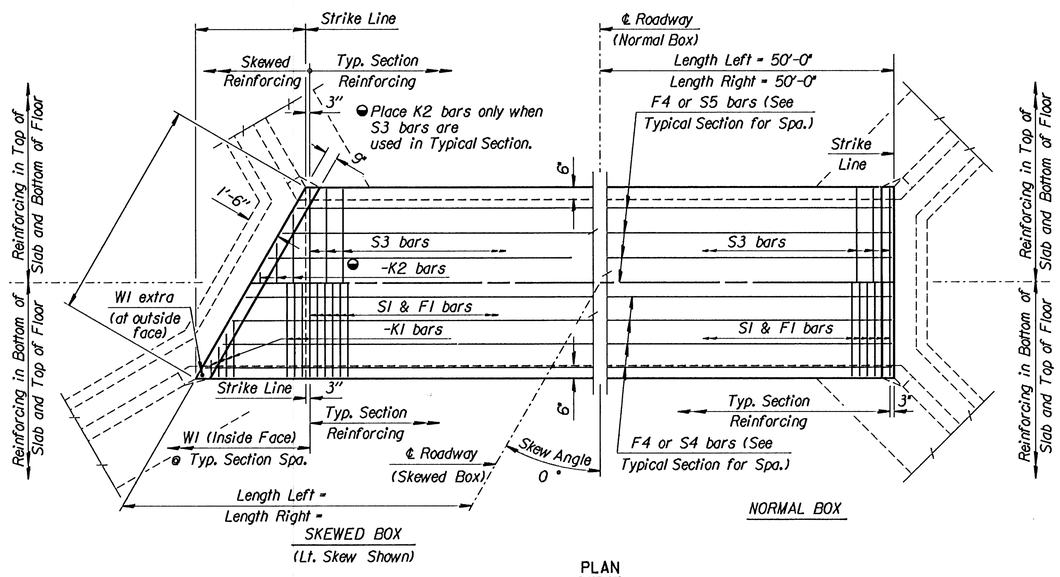

PLAN

GENERAL NOTES

LOADING: HS20-44 AASHTO Specifications, 1983 Edition.
UNIT STRESSES: Class AAA Concrete; f'c = 4,000 p.s.i.
Reinforcing Steel; fy = 60,000 p.s.i.
FILL HEIGHT: Unless otherwise noted, the Design Fill Height is measured from the riding surface at the culvert and shall include the surfacing.
CONCRETE: Class AAA Concrete shall be used throughout. Bevel all exposed edges with a ¾ inch triangular moulding. Where Class AAA Concrete (AE) is specified, it shall be placed in the top slab above the Construction Joint.
REINFORCING: All reinforcing shall conform to ASTM A615, Grade 60. All dimensions relative to reinforcing steel shall be to centerline of bar unless otherwise noted.
EXCAVATION: Excavation for culverts less than bridge length shall not be paid for directly but shall be subsidiary to Class AAA Concrete. Excavation for RCB Bridges shall be paid for as Class III Excavation.
SEAL COURSE: A Seal Course may be required by the Engineer. The Seal Course shall be unreinforced Concrete (Commercial Grade) to a minimum depth of 3 inches or as determined by the Engineer. Concrete for the seal course shall be paid for at the unit price set for Concrete for Seal Course.
FOUNDATION STABILIZATION: Foundation Stabilization may be required as directed by the Engineer. The depth of Foundation Stabilization shall be determined by the Engineer. Foundation Stabilization shall be paid for at the determined Unit Price set for Foundation Stabilization. See Auxiliary Details.
QUANTITIES: The quantities shown in the Culvert Summary include apron and/or soil saver quantities when their construction is required by the plans. Payment for additional quantities that result from including seal course and/or floating apron, as a change in original plans, shall be made at the Unit Price bid for the various items involved.
GRANULAR BACKFILL (WINGWALLS): Special backfill procedures may be required at the direction of the Engineer. See Auxiliary Details Sheet.
STRIKE LINE: Wingwalls and that portion of the RCB outside the Strike Line shall be constructed level. Footing for wingwalls shall be constructed with the culvert floor. See wingwall detail sheet.

CULVERT SUMMARY

Flow Line Elev. Lt.	Flow Line Elev. Rt.	Crown Gr. Elev.	Design Fill Ht.	Skew	Left Wings	Right Wings	Scour Apron	Soil Saver	Granular Backfill	Concrete Barrel (Cu.Yds.)	Concrete Wings (Cu.Yds.)	Concrete Total (Cu.Yds.)	Reinf. Steel (Gr. 60) Barrel (Lbs.)	Reinf. Steel (Gr. 60) Wings (Lbs.)	Reinf. Steel (Gr. 60) Total (Lbs.)
1280.58	1280.08	1287.00	3	0	NONE	NONE	NO	NO	NO	48.63		48.63	5356.22		5356.22

BAR SCHEDULE

F1 Size	Spa.	No.	Length					F3 Size	Spa.	No.	Length	F4 Size	No.	Length	S1 Size	Spa.	No.	Length					S3 Size	Spa.	No.	Length	S4 Size	No.	Length	S5 Size	No.	Length
5	5"	240	6'-8"	-	-	-	-	-	-	-	-	4	15	34'-2"	5	5"	240	6'-8"	-	-	-	-	-	-	-	-	4	15	34'-2"	-	-	-

K1 Size	Spa.	No.	Length	K2 Size	Spa.	No.	Length	W1 Size	Spa.	No.	Length					W3 Size	No.	Length					G1 Size	No.	Length	G2 Size	No.	Length				
-	-	-		-	-	-		4	9"	268	5'-0"	-	-	-	-	4	18	34'-2"	-	-	-	-	5	4	6'-8"	-	-	-				

Minimum Splice Lengths	
#4	1'-4"
#5	1'-8"
#6	2'-0"

SUMMARY OF QUANTITIES

Class AAA Concrete	48.6	C.Y.
Class AAA Concrete (AE)	0.0	C.Y.
Reinforcing Steel (Gr. 60)	5360	Lbs.
Reinforcing Steel (Epoxy Coated)	0	Lbs.
Class III Excavation		C.Y.
Foundation Stabilization (Set)	1	C.Y.
Concrete for Seal Course (Set)	1	C.Y.
Granular Backfill (Wingwalls) (Set)	1	C.Y.

NO.	DATE	REVISIONS	BY	APP'D

KANSAS DEPARTMENT OF TRANSPORTATION

Sta. 49+04

SINGLE 6' x 4' RCB

BR 1.06.04 SEDGWICK CO.

FHWA APPROVAL 6-5-91 APP'D KENNETH F. HURST
DESIGNED DETAILED QUANTITIES TRACED
DESIGN CK. DETAIL CK. QUAN.CK. TRACE CK.

42D

VERSION: 5.1.0 COMPILED: 03/01/95

DISC. FROM BRJAD. PROJ. CO.
DESIGN DESIGN CHECK
DESIGN DATE DATE
DETAIL DATE DATE
QUANTITIES DATE DATE
TRACING DATE DATE
RETRACED DATE DATE

/proj /usr2/proj/mkec4.dgn 13-MAY-1997 10:19 View-