FHWA REGION NO.		PROJECT NO.	YEAR	SHEET NO.	TOTAL SHEETS
7	KANSAS	87N 0064-01	1997	101	130

POWER POLE DETAILS

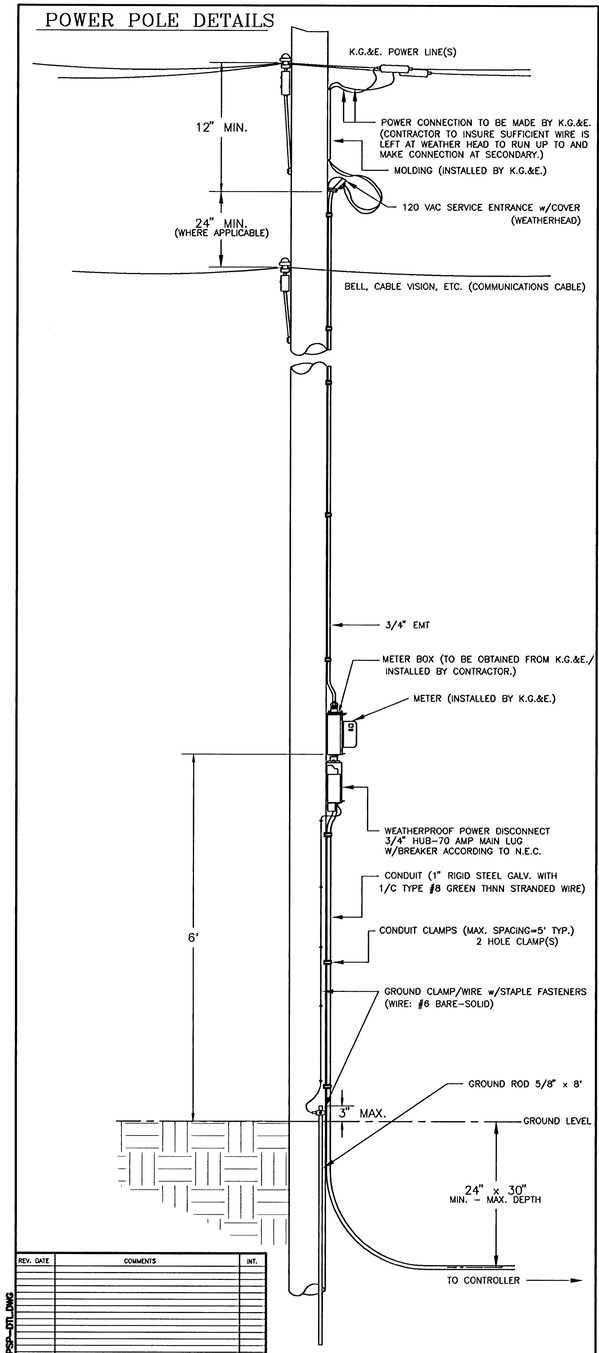

REV. DATE	COMMENTS	INT.

SPANWIRE ASSEMBLY DETAILS

1. MAX. SAG = 5% OF SPAN.
2. STANDARD BACKRAKE = 1.5'
3. HEIGHT OF STRAIN WIRE HOOK-UP TO BE DETERMINED BY FIELD ENGINEER. TRAFFIC SIGNAL CABLE TO BE SECURED TO STRAIN (SPAN) WIRE WEATHERABLE NYLON CABLE HANGERS (12" CTR.) DETAIL 'B'
4. TETHER CLAMP TO BE DESIGNED TO RELEASE UNDER 'HIGH WIND LOAD' TO PERMINT SIGNAL 'FREE SWING'.

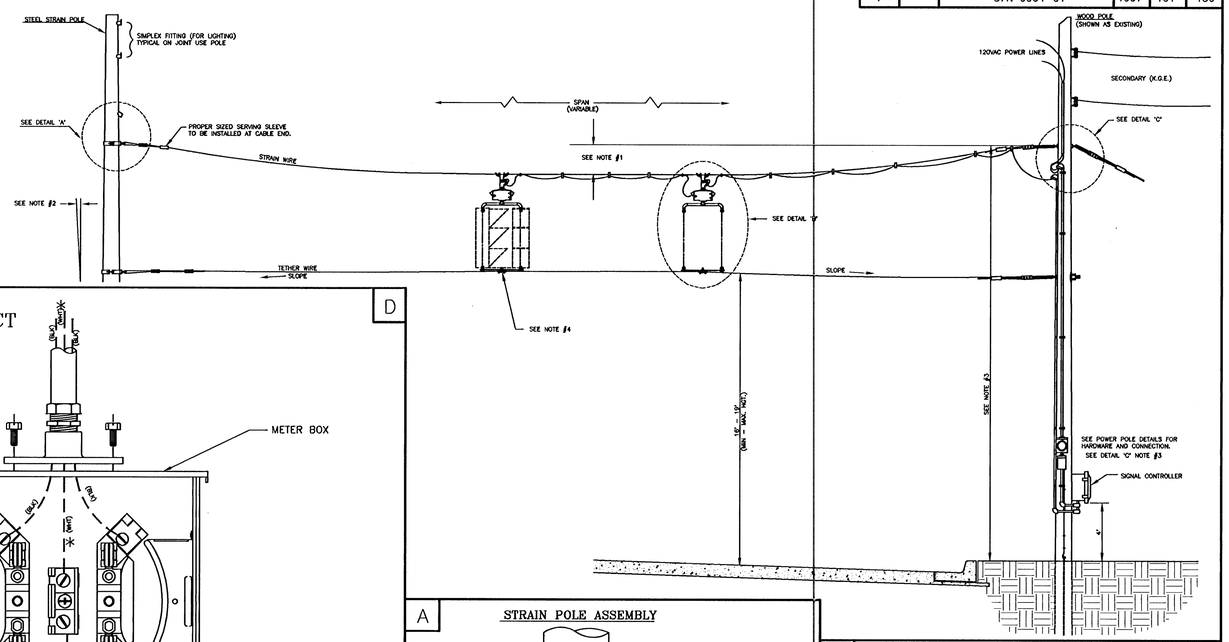

METER BOX & POWER DISCONNECT DETAILS

D

NOTE:

* TO BE MARKED WITH WHITE TAPE

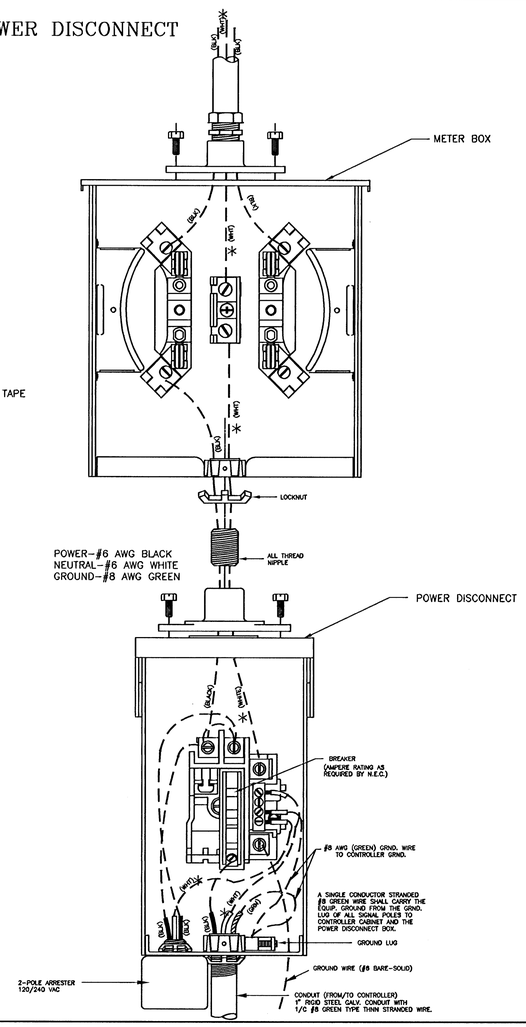

A

STRAIN POLE ASSEMBLY

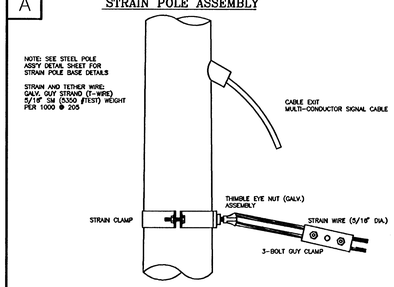

B

SIGNAL BRACKET ASSEMBLY DETAILS

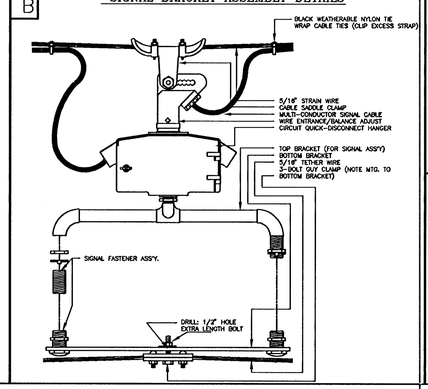

C

WOOD POLE ASSEMBLY DETAILS

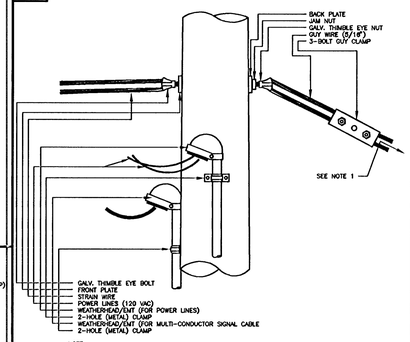

NOTE:

1. GALV. THIMBLE EYE ANCHOR BOLT AND EXPANDING ANCHOR (NOT SHOWN) TO STABILIZE WOOD POLE (WHERE APPLICABLE)
2. ANY COMBINATION OF ROUND/THIMBLE EYE BOLTS AND NUTS MAY BE UTILIZED AS APPLICATION MAY VARY. FIELD ENGINEER TO DETERMINE TYPE OF HARDWARE USED.
3. HARDWARE SHOWN IS TRANSFERRABLE TO STEEL POLE IN WHOLE OF PART WHERE STEEL STRAIN POLE IS USED. (POWER, SIGNAL CABLE, METER, ETC.) FIELD ENGINEER TO MAKE DETERMINATION. STEEL STRAIN POLE APPLICATIONS MAY VARY AS TO MOUNTING ON POLE USE OF CLAMPS, BANDED BRACKETS, ETC. ARE STD. - FIELD ENGINEER TO DETERMINE BEST TYPE APPLICATIONS.

PROJECT DESCRIPTION

POWER POLE AND SPAN POLE ASSEMBLY DETAILS

PROJECT NUMBER

DRAWN BY: T.M.	APPROVED BY	REVISED BY:
DATE: FEB. 96		DATE:

CITY OF WICHITA
DEPARTMENT OF PUBLIC WORKS

DIVISION OF TRAFFIC ENGINEERING	SCALE
WM. G. McKINLEY P.E. TRAFFIC ENGINEER	NO SCALE

H:\CIVIL\SENECA\94005\DETAILS\PPSP-DTL Fri May 30 13:48:32 1997
PPSP-DTL.DWG