| FHWA REG NO. | STATE | PROJECT NO. | YEAR | SHEET NO. | SHEETS |
|---|---|---|---|---|---|
| 7 | KANSAS | 472-84408 | | 3 | 24 |

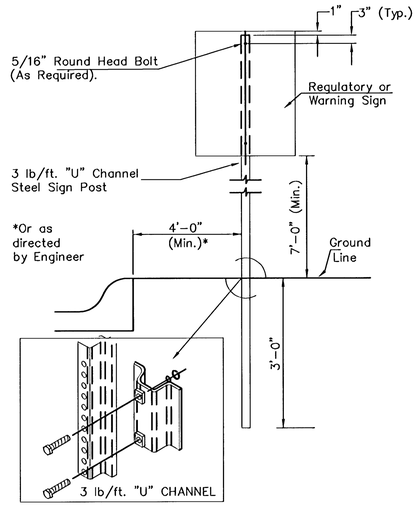


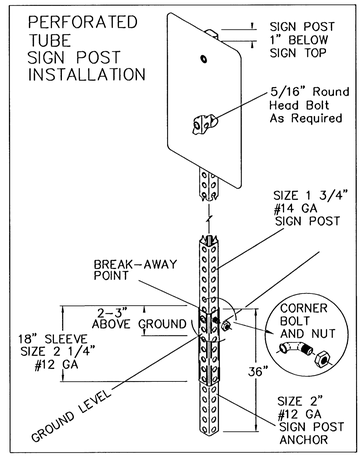


*TYPICAL TRAFFIC CONTROL SIGN MOUNTING INSTALLATION*

*CURB AND GUTTER SECTION*

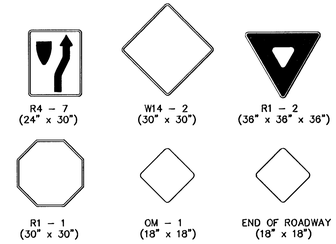


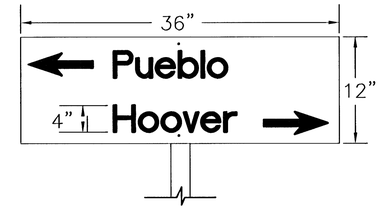


*FLAT PLATE STREET NAME SIGN*

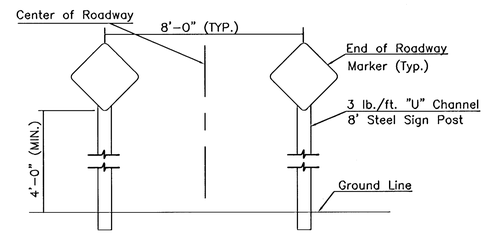


*TYPICAL END OF ROADWAY SIGN MOUNTING INSTALLATION*

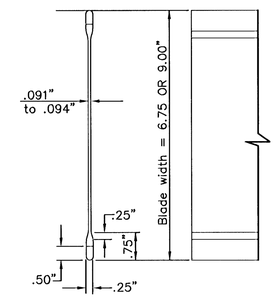


*STREET NAME SIGN*

*BLADE DETAILS*

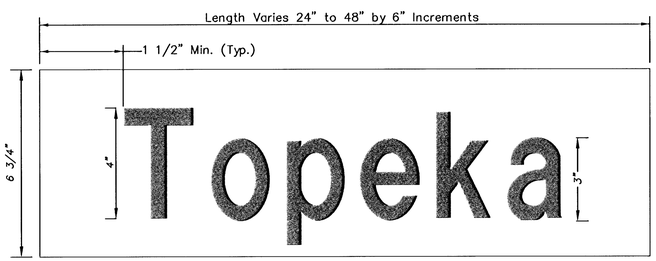


DETAIL A

6 3/4" STANDARD

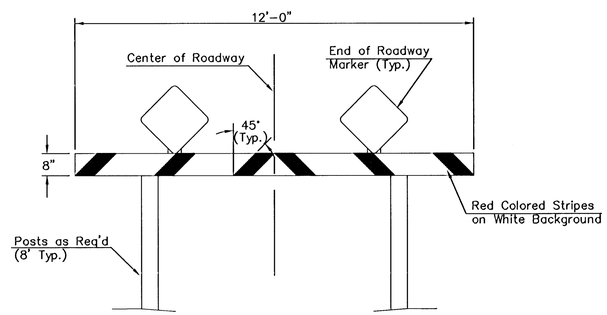


*TYPE I BARRICADE DETAIL W/ E.O.R. MARKERS*

## SIGN ASSEMBLY TABLE

| STATION | OFFSET | SIGN | QUANTITY* |
|---|---|---|---|
| *Fawn Grove* | | | |
| *9+50* | *6' LT & RT.* | *OM4-3* | *2* |
| | | | |
| | | | |
| | | |