| FHWA REG NO. | STATE | PROJECT NO. | YEAR | SHEET NO. | SHEETS |
|---|---|---|---|---|---|
| 7 | KANSAS | 472-84083 | 05 | 4 | 34 |

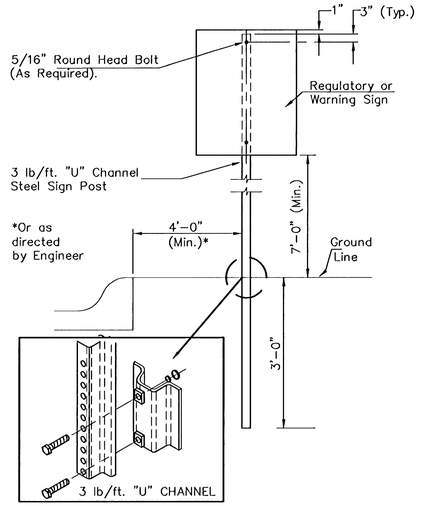


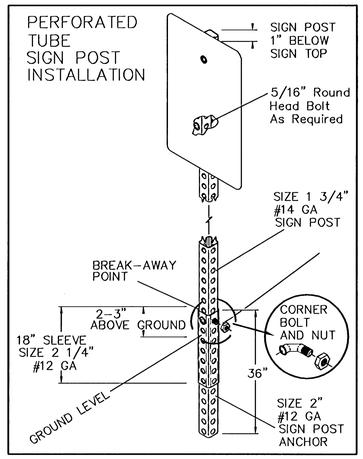


*TYPICAL TRAFFIC CONTROL SIGN MOUNTING INSTALLATION*

*CURB AND GUTTER SECTION*

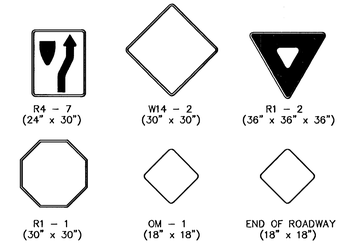


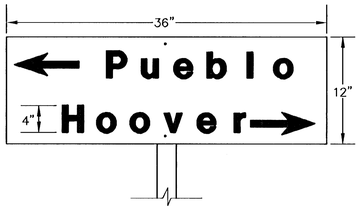


*FLAT PLATE STREET NAME SIGN*

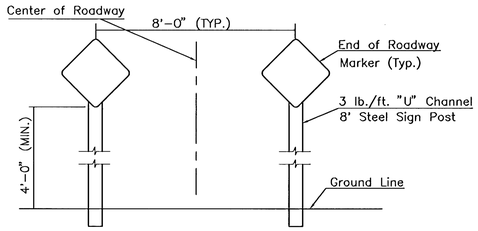


*TYPICAL END OF ROADWAY SIGN MOUNTING INSTALLATION*

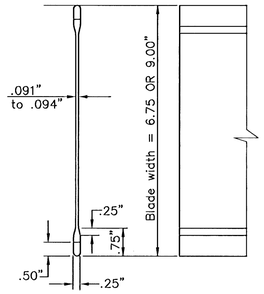


*STREET NAME SIGN*

*BLADE DETAILS*

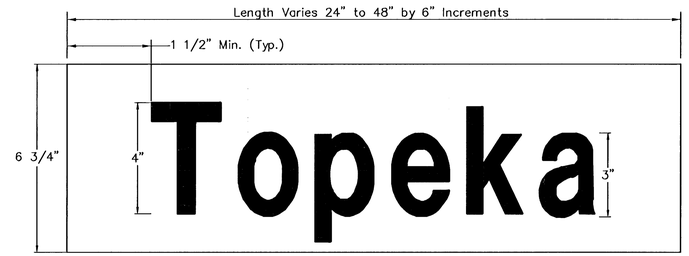


DETAIL A

6 3/4" STANDARD

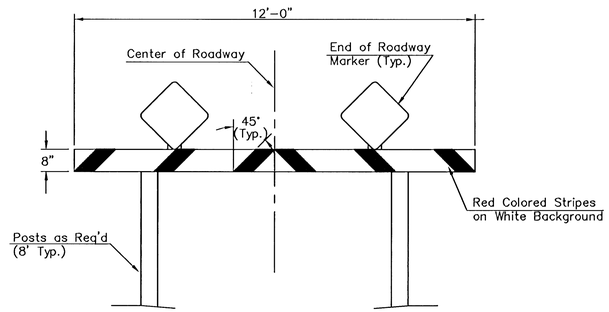


*TYPE I BARRICADE DETAIL W/ E.O.R. MARKERS*

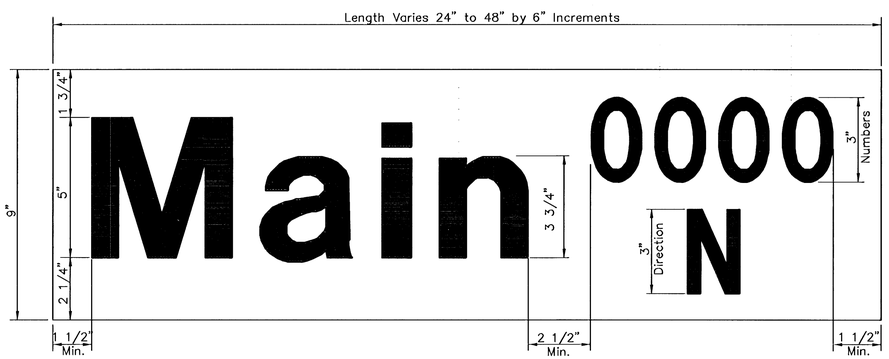


DETAIL B

9" METRO

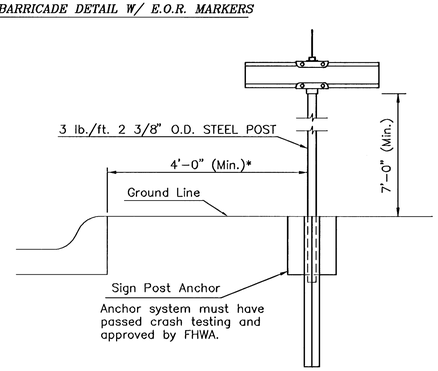


*TYPICAL STREET NAME SIGN MOUNTING INSTALLATION*

*CURB AND GUTTER SECTION*

## *SIGN ASSEMBLY TABLE*

| STATION | OFFSET | SIGN | QUANTITY* |
|---|---|---|---|
| BL#1 10+30.61 | 23.5' RT. | SNS | 1 |
| BL#1 10+75 | 17.5' RT. | W14-2 | 1 |
| | | | |
| | | | |
| | | |