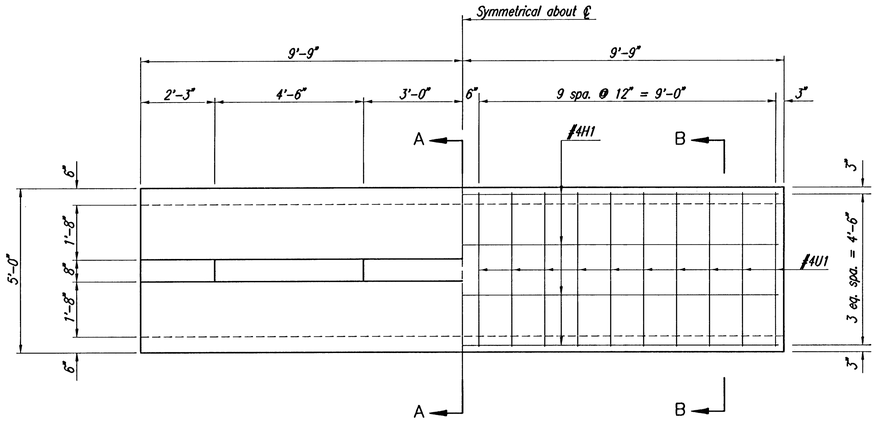

PLAN

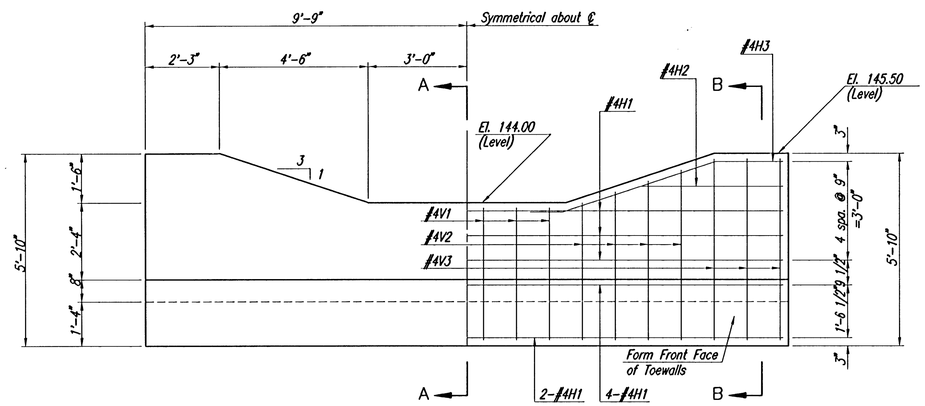

ELEVATION

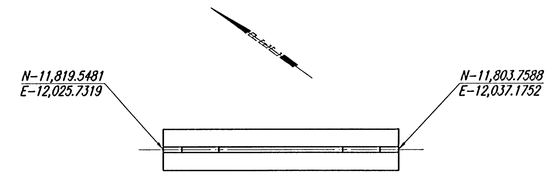

PLAN

BILL OF MATERIALS							
REINFORCING STEEL							
Straight Bars				Bent Bars *			
Mark	No.	Size	Length	Mark	No.	Size	Length
H1	11	#4	19'-2"	V1	6	#4	4'-2"
H2	2	#4	4'-9"	V2	8	#4	Varies
				V3	6	#4	5'-7"
				H3	2	#4	7'-9"
				U1	20	#4	7'-10"

* See Bending Diagrams

SUMMARY OF QUANTITIES		
ITEM	QUANTITY	UNIT
Concrete	4.8	C.Y.
Reinforcing Steel	320	Lbs.

GENERAL NOTES

UNIT STRESSES:
CONCRETE: F'c=4,000 P.S.I., Fy=60,000 P.S.I.
Fc=1,600 P.S.I., Fs=24,000 P.S.I.

CONCRETE: Concrete shall have a minimum 28 day compressive strength of 4,000 P.S.I. Bevel all exposed edges with a 3/4 " triangular moulding, unless otherwise noted.

REINFORCING STEEL: All reinforcing steel shall conform to ASTM Designation A615 Grade 60 and shall be epoxy-coated. All dimensions relative to reinforcing are to centerline of bars unless otherwise noted. Bar bending and dimensions shall be as shown and noted on the bar bending diagrams. The concrete cover for all reinforcing shall be a minimum of 2" unless otherwise noted.

JOINTS: Construction joints shall only be formed at locations shown or as approved by the Engineer.

BASIS OF PAYMENT

The "R.C. Weir" shall be paid as a lump sum which shall include all labor, material, excavation, concrete, reinforcing steel and all other incidentals necessary to complete the work. Quantities shown are for information only.

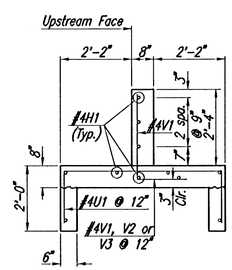

SECTION A-A

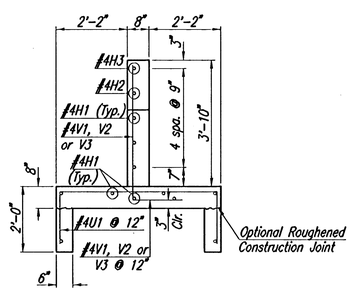

SECTION B-B

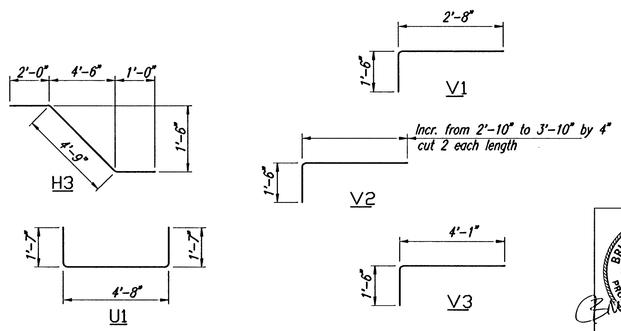

BENDING DIAGRAMS
Dimensions are out to out of bars

RECORD DRAWING
02 OCT 06

BRIAND BOUTWELL LICENSED 10889 PROFESSIONAL ENGINEER
6-15-05

No.	Revision	By	Date

AVALON PARK 3RD
STORM WATER DRAIN NO. 264

R.C. WEIR DETAILS

JAMES L. ARMOUR, P.E.-CITY ENGINEER
CITY OF WICHITA PROJECT NO. 468-84011

Professional Engineering Consultants, P.A.
303 S. TOPEKA • WICHITA, KANSAS 67202
316-262-2691 • FAX 316-262-3003

Designed by	BDB, BLB	Job No.	35-05257
Drawn by	BJS	Date	February 2005

SN. 11 of 31

DSNR: BLB OPER: BJS SCALE: 1=2.00
Q:\2005\05257\05257-C-19.SWER 06-16-2005 12:17:08 am