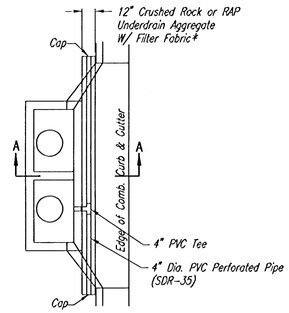

PLAN

* UNDERDRAIN AGGREGATE
PERCENT OF AGGREGATE RETAINED

1"	0
3/4 "	0-10
3/8 "	45-80
#4	90-100
#8	95-100

ROCK QUALITY SHALL CONFORM TO THE REQUIREMENTS SPECIFIED BY THE KDOT 1990 EDITION STANDARD SPECIFICATION SUBSECTION 1102 FOR DURABILITY CLASS I.

PAVEMENT UNDERDRAIN LOCATIONS		
STREET	STATION	SIDE
LAKE RIDGE	30+58.00	LT. & RT.

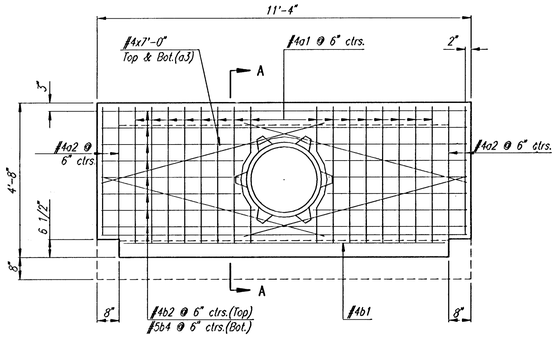

PLAN

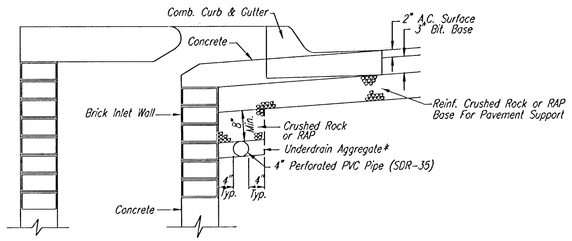

Min. 16 Perforations Per Lin. Ft. @ 1/4" Dia.
Perforations To Be on Bottom Half

SECTION A-A

PAVEMENT UNDERDRAIN DETAIL

NOTE: PLACE 4" PVC PERFORATED PIPE AT ALL DRAINAGE SUMP LOCATIONS.

COST OF UNDERDRAIN SYSTEM TO BE INCIDENTAL TO THE REINFORCED CRUSHED ROCK OR REINFORCED RECYCLED ASPHALT PAVEMENT (RAP) BASE.

INLET TYPE MAY VARY FROM THAT SHOWN.

NOTE: SWS CONTRACTOR SHALL INSTALL SDR 35, 4" DRAIN PIPE STUB ONLY THROUGH WALL OF THIS CURB INLET AND CAP TO ALLOW FUTURE CONNECTION OF TEE AND ADDITIONAL DRAIN PIPE BY OTHERS.

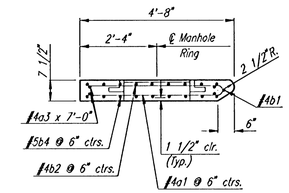

SECTION A-A

SPECIAL TYPE 1A INLET TOP DETAILS

Inlet Sta. 30+58.00 SWS Line No. 1

See Sheet No. 14 for Cast Iron Inlet Ring Details

02 OCT 06

RECORD DRAWING

BRIAND BOUTWELL LICENSED 10889 KANSAS PROFESSIONAL ENGINEER

6-15-05

No.	Revision	By	Date

AVALON PARK 3RD
STORM WATER DRAIN NO. 265

MISCELLANEOUS DRAINAGE DETAILS

JAMES L. ARMOUR, P.E.-CITY ENGINEER
CITY OF WICHITA PROJECT NO. 468-84012

Professional Engineering Consultants, P.A.
303 S. TOPEKA • WICHITA, KANSAS 67202
316-262-2691 • FAX 316-262-3003

Designed by	BDB, BLB	Job No.	35-05258	Sht. 15 of 35
Drawn by	BJS	Date	February 2005	

DSNR: BLB OPER: BJS SCALE: 1=10.00
Q:\2005\05258\05258-C-MISC DRAINAGE DETAILS 06-16-2005 10:55:33 am