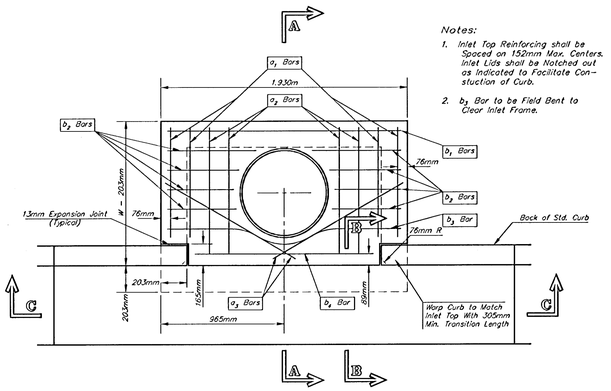

PLAN

Notes:

1. Inlet Top Reinforcing shall be Spaced on 152mm Max. Centers. Inlet Lids shall be Notched out as Indicated to Facilitate Construction of Curb.
2. b_3 Bar to be Field Bent to Clear Inlet Frame.

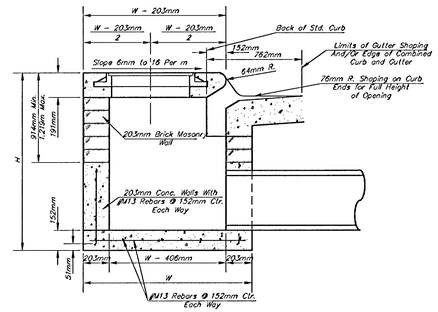

SECTION A–A

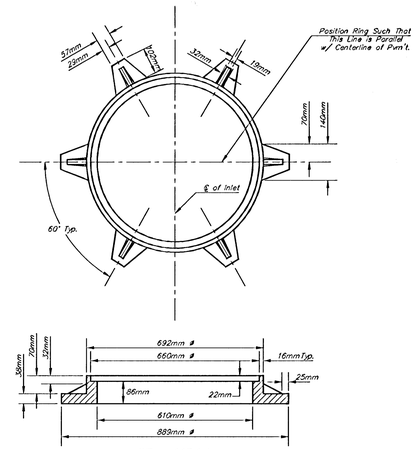

WT. = 147.4 kg

MANHOLE RING AND COVER

*See City of Wichita Standard Manhole Ring and Cover Detail Sheet for Cover Details to Be Used With Inlet Frame.

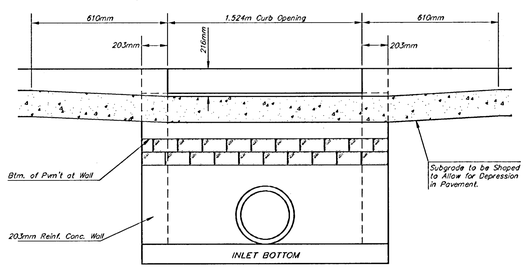

SECTION C–C

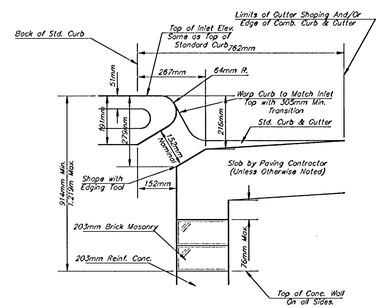

SECTION B–B

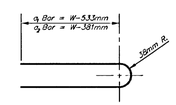

BENDING DIAGRAM

STEEL SCHEDULE

BAR		a_1	a_2	a_3	b_1 #W=1.321m	b_1 #W=1.626m	b_1 #W=1.930m	b_1 #W=2.235m	b_1 #W=2.540m	b_2	b_3	b_4	Wt. kg
NUMBER		4	4	2	1	3	5	7	9	6	1	1	
SIZE		#M13	#M13	#M13	#M13	#M13	#M13	#M13	#M13	#M13	#M13	#M19	
LENGTH	W=1.321m	1.702m	2.007m	1.219m	1.854m	–	–	–	–	533mm	1.880m	1.422m	27k
	W=1.626m	2.311m	2.616m	1.524m	–	1.854m	–	–	–	533mm	1.880m	1.422m	37k
	W=1.930m	2.921m	3.226m	1.829m	–	–	1.854m	–	–	533mm	1.880m	1.422m	46k
	W=2.235m	3.531m	3.835m	2.134m	–	–	–	1.854m	–	533mm	1.880m	1.422m	55k
	W=2.540m	4.140m	4.445m	2.438m	–	–	–	–	1.854m	533mm	1.880m	1.422m	64k

Note: a_3 Bars to be Placed Approx. 51mm Below Top of Inlet Cover.

STANDARD CURB INLET PRECAST TOPS			
W	PRE-CAST TOP SIZE	PIPE SIZE	CU. M. CONC.
1.321m	1.118m 1.930m 2.286m	533mm & SMALLER	0.29k
1.626m	1.422m 1.930m 2.286m	610mm & 762mm	0.38k
1.930m	1.727m 1.930m 2.286m	914mm & 1.067m	0.49k
2.235m	2.032m 1.930m 2.286m	1.219m & 1.372m	0.59k
2.540m	2.337m 1.930m 2.286m	1.524m & 1.676m	0.69k

GENERAL NOTES

1. Concrete tops to be installed on thin mortar cushion to insure full support along brick walls. Concrete tops may be cast in place or precast. Concrete used for inlet construction shall be concrete pavement mix.
2. Contractor shall have the option of constructing 203mm brick masonry walls between the concrete inlet base and top on this inlet when W=1.930m and H=2.134m or less.
3. Inlet invert shall be shaped with 8 sack sand mix concrete to create flow channels and to increase hydraulic efficiency such that the inlet will be self cleaning between all inlet and/or outlet pipes.
4. The ends of all pipes installed in inlets shall be cut off flush with the inside face of the inlet wall.

Concrete shall be C.O.W. standard paving mix. All exposed edges shall be finished with an edging tool. Reinforcing bars shall be field bent or cut to clear pipes and inlet rings. All bars are #M13 bars @ 152mm spacing and shall have a minimum clearance of 38mm unless otherwise noted. Floors of inlet shall be shaped with 8 sack sand mix concrete to increase hydraulic efficiency such that the inlet will be self cleaning between all inlet and/or outlet pipe(s).

Concrete tops to be installed on thin mortar cushion to insure full support along walls. Concrete tops may be cast in place or precast.

The ends of all pipes installed in inlets shall be cut off flush with the inside face of the inlet wall.

See Pavement Underdrain Detail, Sheet 13.

Revised – Dec. 21, 1984

DESIGN	DATE	CITY PROJECT NUMBER	BAUGHMAN PROJECT NUMBER	CITY OF WICHITA, KANSAS
C.O.W.	JULY99	472-76-245-82910	98-01-E965	STANDARD TYPE I SINGLE CURB INLET DETAILS
DRAWN	SCALE	APPROVED	DIRECTORY	INLET OPENING – 152mm x 1.524m
STAFF	NONE	JFB	F:\MCLINT\DETAILS	
			SPREADSHEET	
			MSTYP1-S.DWG	

BAUGHMAN COMPANY P. A.
ENGINEERING, SURVEYING, & PLANNING
316-262-7271 • 315 ELLIS • WICHITA, KANSAS 67211

SHEET 17 OF 40