


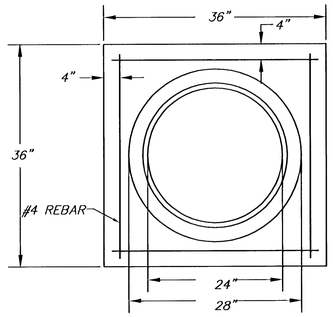


## JUNCTION BOX CAP

36" x 36" x 6" TOP OF CAP TO BE FLUSH WITH GROUND LEVEL.

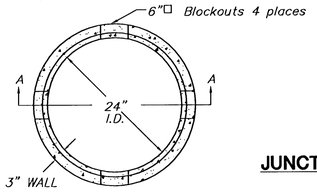


* SEE SERVICE BOX INSTALLATION FOR RING & COVER DETAILS.

## JUNCTION BOX DETAILS

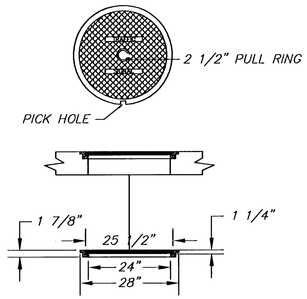


## RING & COVER DETAIL

## NOTES:

SERVICE & JUNCTION BOX:

1. CONDUIT CONNECTION TO BE FLUSH TO WITHIN 125 mm OF INSIDE FACE OF SIDE WALL, CONDUIT TO DRAIN INTO SERVICE BOX.
2. CONDUIT CONNECTIONS TO SERVICE BOX SHALL BE TERMINATED WITH PLASTIC CABLE BUSHING.
3. CONDUIT SHALL BE SEALED WITH APPROVED SEALER AT INSIDE WALL FACE.
4. ALL SERVICE & JUNCTION BOXES TO HAVE 200 mm OF CRUSHED ROCK.

TRENCHING:

1. DEPTH TO BE 30" MINIMUM WITH ROCK & STUBBLE FREE BACKFILL TO SERVE AS BEDDING MATERIAL. MAINTAIN MINIMUM CONDUIT DEPTH IN TRENCH.
2. BACKFILL TO BE COMPACTED IN 6" LOOSE LIFTS BY HAND OR MECHANICAL TAMPING TO A 95% STANDARD DENSITY.

CONDUIT:

1. SLOPE CONDUIT TO DRAIN AS DIRECTED BY THE ENGINEER.
2. 3" RIGID STEEL CONDUIT BTWN. SERVICE BOXES.
   1 1/4" " " " BTWN. SERVICE & JUNCTION BOXES.
   3/4" " " " BTWN. JUNCTION BOXES.
   3/4" " " " BTWN. JUNCTION BOX & DETECTOR LOOP SAW CUT

NOTE: CONTRACTOR TO VERIFY LOCATION AND NUMBER OF LIGHT POLES TO BE INSTALLED PRIOR TO CONSTRUCTION.

SCALE: 1"=40
40 20 0 40

N




| SUMMARY OF QUANTITIES | | |
|---|---|---|
| No. Poles to be Removed | No. Poles to be Re-located | No. Junction Boxes |
| 18 | 18 | 8 |

### LEGEND

- LP ✕ Existing Light pole to be removed
- LP ● Existing light pole to remain
- ⊠ Relocated light pole
- □ Junction Box
- – – – – – 480V, 1-PHASE, 2-#6, #6 GND, 1-¼" PVC CONDUIT (TYPICAL)

J:\Civil\03245\DWG\pave\03245LHT.dwg 1/11/2005 10:45:34 AM CST

MKEC ENGINEERING CONSULTANTS
411 N. WEBB ROAD
WICHITA, KS. 67206
316 - 684 - 9600

**McCORMICK AVENUE STREET IMPROVEMENTS**
PROJECT NAME

**STREET LIGHTING PLAN**
SHEET TITLE

| JRA | DPG | JRA |
|---|---|---|
| DESIGN BY: | DRAWN BY: | CHECKED BY: |
| AUGUST 2005 | 03245 | 55 / 111 |
| DATE | JOB NO. | SHEET/OF |