FHWA REG NO.	STATE	PROJECT NO.	YEAR	SHEET NO	TOTAL SHEETS
7	KANSAS	87 N-0088-01	1999	17	38

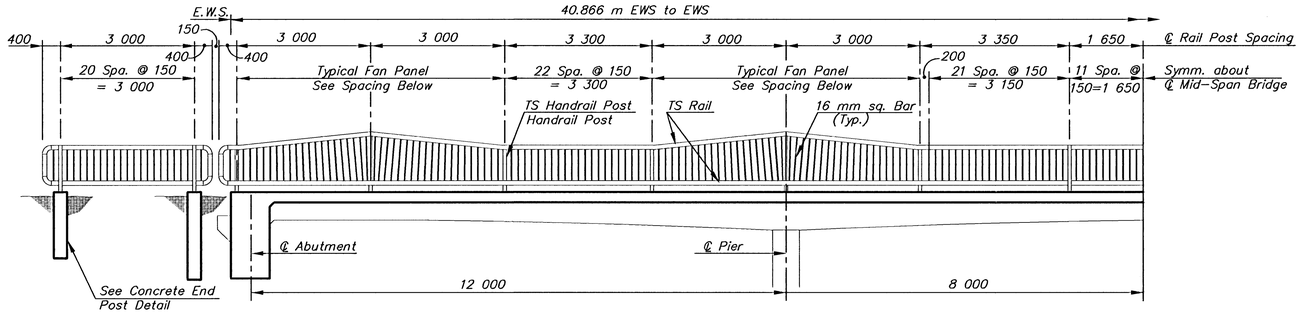

HALF ELEVATION

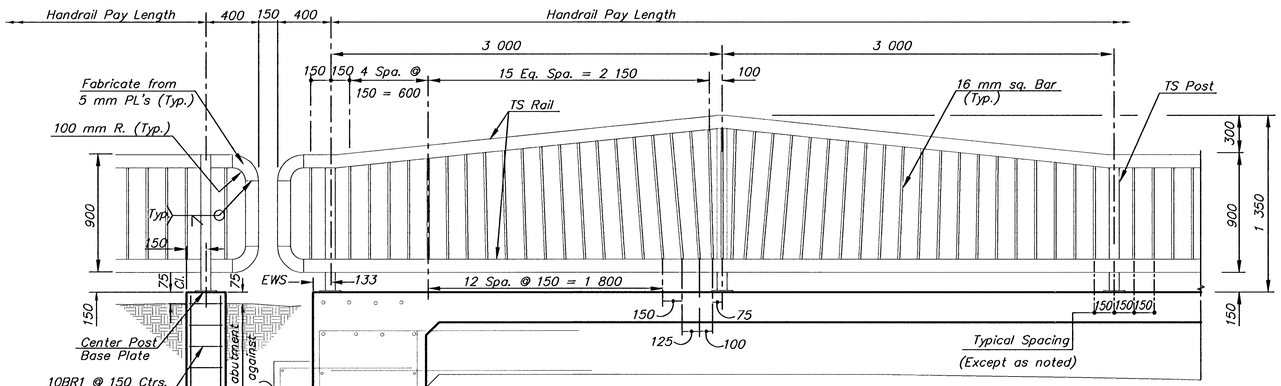

TYPICAL FAN PANEL DETAIL

CONCRETE END POST DETAIL

SUMMARY OF QUANTITIES CONCRETE END POST (For Information Only)	
Grade 30 (AE)	0.93 m3
Reinforcing Steel (Grade 420)	80 kg

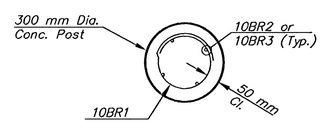

SECTION THRU END POST

BAR SCHEDULE (For Information Only)			
Bar	BR1	BR2	BR3
No.	96	16	16
Size	10	10	10
Length	928	1 500	1 800

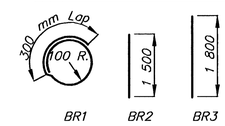

BENDING DIAGRAM

HANDRAIL NOTES

1. Plates, bars and angles, shall conform to ASTM Designation A36 or equivalent. Structural tubing shall conform to ASTM A 500 or A 501.
2. Rail on bridge shall be fabricated in lengths to include a minimum of two and a maximum of three panels. The approach section shall be a single panel unit. Posts shall be set vertical. Shims may be used between concrete and base plates of posts.
3. All parts of Handrail shall be painted. The primer coat shall conform to the inorganic Zinc System. Surface preparation shall be in accordance with that for structural steel. The finish coat shall be High-Build Polyurethane Finish Coat in accordance with the most current KDOT Special Provision. All materials, equipment and labor necessary for the installation of the handrail shall be subsidiary to the bid bitem.
4. Prior to ordering paint, the Contractor shall submit a color chart to be approved by the City of Wichita.
5. Concrete Grade 30 (AE) shall be used for concrete end post. Quantities for concrete end posts are included in the substructure total shown in the Summary of Quantities.
6. All reinforcing shall conform to ASTM A615M Grade 420. The quantity of reinforcing steel required for the concrete end posts is included in the total shown on sheet no. 8 in the Summary of Quantities.

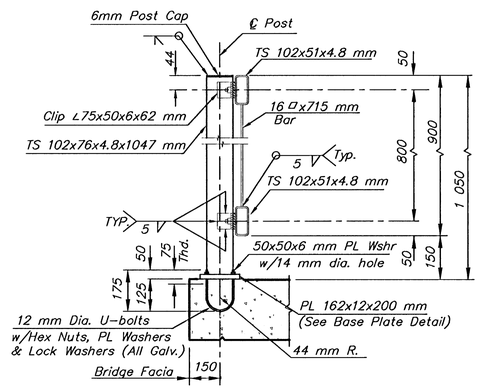

TYPICAL RAIL SECTION

NOTE:
The concrete and reinforcing quantities are included in Bridge quantities.

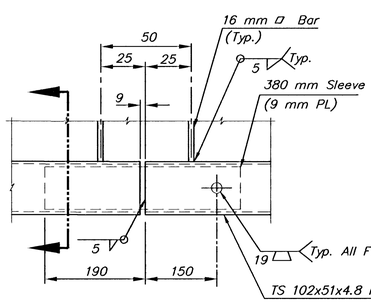

TYPICAL RAIL SPLICE DETAIL
(Bottom Rail Shown, Top Rail Similar)

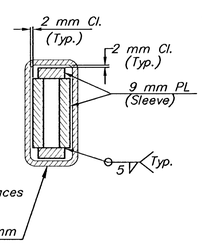

SECTION THRU SLEEVE

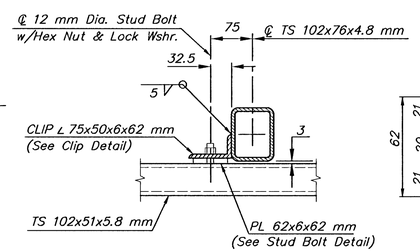

RAIL CONNECTION TO POST DETAIL

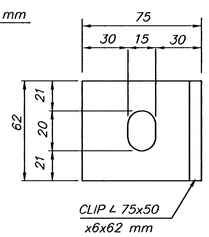

CLIP DETAIL

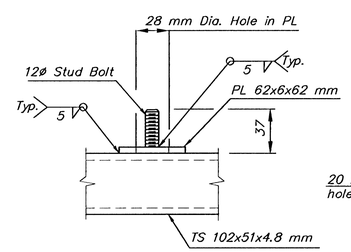

STUD BOLT DETAIL

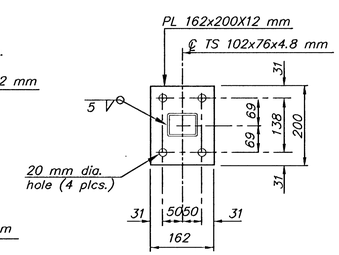

BASE PLATE DETAIL

NO.	DATE	REVISIONS	BY	APP'D
2				
1				

KANSAS DEPARTMENT OF TRANSPORTATION
BR. NO. 530400870GC1020 STA. 1+450.20
BRIDGE HANDRAIL DETAIL
PROJ. NO. 87 N-0088-01 SEDGWICK CO.

MID-KANSAS ENGINEERING CONSULTANTS, INC.
WICHITA, KANSAS

DESIGNED BY:	KJS, PAF	CHECKED BY:	MDK	
DRAWN BY:	DPG, MLW	DATE: 11-19-98	SHEET	OF

DATE	BY
REFERENCES NOTED	
REFERENCES CHECKED	

H:\CIVIL\9504B\DETAILS\9504BHND.DWG Thu Jan 28 11:53:20 1999 Plotted by DPG