FHWA REGION NO	STATE	PROJECT NO.	YEAR	SHEET NO.	TOTAL SHEETS
7	KANSAS	87 N-0137-01	99	39	94

PHASE 2
TRAFFIC CONTROL

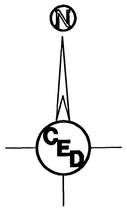

1"=200'

LEGEND

- –TRAFFIC CONTROL SIGN
- –REFLECTORIZED DRUM
- –BARRICADE
- –CONSTRUCTION WORK AREA

*LIST OF TRAFFIC CONTROL DEVICES

MUTCD DEVICE NO.	NO.	FLASHERS TYPE A	FLASHERS TYPE B	REMARKS
W8-1	As Req'd.			"BUMP"
W8-9a	As Req'd.			"SHOULDER DROP OFF" SIGN
W8-11	As Req'd.			"UNEVEN LANES" SIGN
W20-1	As Req'd.			"ROAD WORK AHEAD"
R11-4	As Req'd.			"ROAD CLOSED TO THROUGH TRAFFIC"
R11-2	As Req'd.			"ROAD CLOSED"
W4-2(R)	As Req'd.			LANE ENDS SYMBOL
R3-1	As Req'd.			NO RIGHT TURN SYMBOL
R3-2	As Req'd.			NO LEFT TURN SYMBOL
R5-1	As Req'd.			DO NOT ENTER SYMBOL
R6-1(L)	As Req'd.			ONE WAY LEFT SYMBOL
R6-1(R)	As Req'd.			ONE-WAY RIGHT SYMBOL
R4-7	As Req'd.			KEEP RIGHT SYMBOL

* FOR INFORMATION ONLY

DELINEATORS & CHANNELIZATION DEVICES

MUTCD DEVICE NO.	NO.	SIZE	FLASHERS TYPE A	FLASHERS TYPE B	FLASHERS TYPE C
BARRICADES * *					
① TYPE III	5	≥10'	10		
TYPE II					
TYPE I					
DRUMS	As Req'd.				
CONES					
TUBES					
VERTICAL PANELS					
SINGLE					
BACK TO BACK					
PAVEMENT MARKING	WHITE	YELLOW			
4" BROKEN (Lin. Ft.)					
4" SOLID (Lin. Ft.)					
TEMPORARY PAVEMENT MARKING TAPE (Type I)		5,165			

* * ALL BARRICADES SHALL BE DOUBLE FACED.

GENERAL NOTES

1. TWO WAY TRAFFIC ON 29TH ST. NORTH TO REMAIN OPEN AT ALL TIMES.

2. AT ALL TIMES AND DURING ALL WEATHER CONDITIONS, ACCESS FOR ENTRANCES ON THE SOUTH SIDE OF 29TH ST. NORTH SHALL BE MAINTAINED TO THE SATISFACTION OF THE ENGINEER.

3. ENTRANCES ALONG THE NORTH SIDE OF 29TH ST. NORTH SHALL BE CONSTRUCTED ONE-HALF AT A TIME, UNLESS THE PERMISSION OF THE PROPERTY OWNER IS OBTAINED FOR RECONSTRUCTION OF THE ENTIRE ENTRANCE.

① *At these entrances Contractor shall use temporary striping, appropriate signing and barrels as required to maintain access to entrances at all times except with Engineer's approval.*

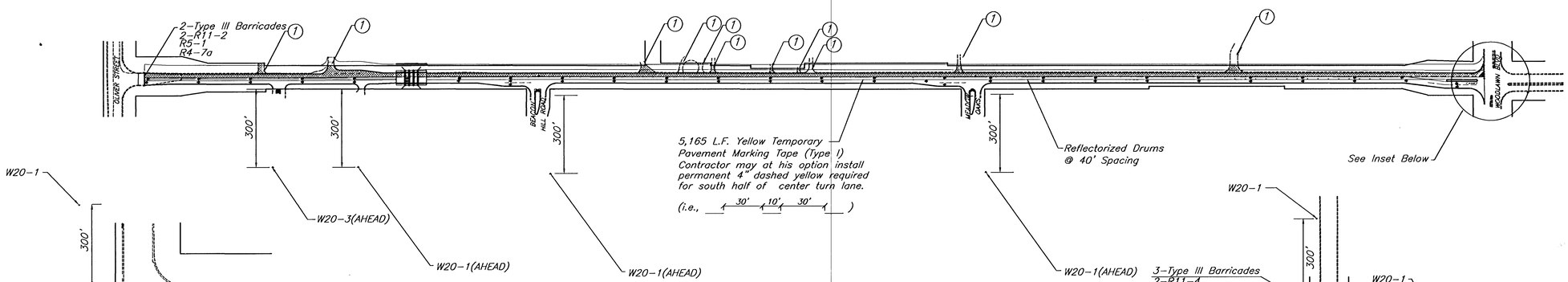

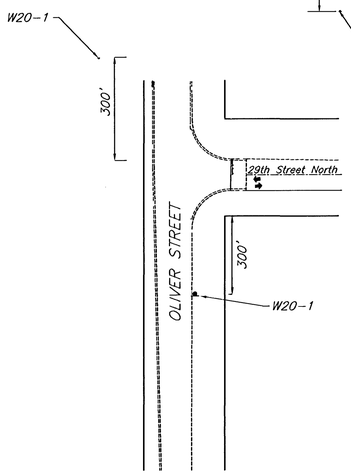

Oliver & 29th St. North Intersection

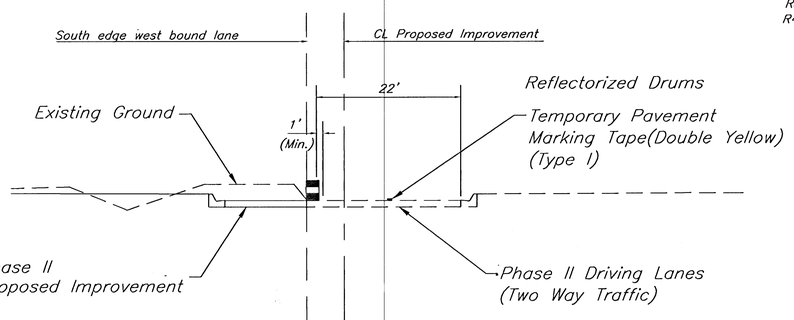

Phase II Typical Section

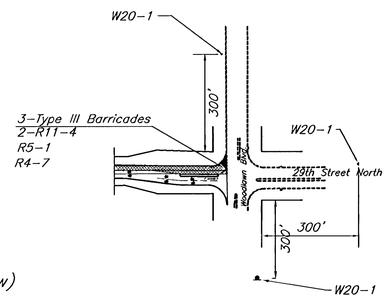

Woodlawn & 29th St. North Intersection

Drawn By: ARK, HDF	Plot Date: 6-12-98
File: TC-PLAN2.DWG	

PHASE 2
TRAFFIC CONTROL PLAN
29TH STREET NORTH
WICHITA, KANSAS

CERTIFIED ENGINEERING DESIGN

CED
438 NORTH OHIO
WICHITA, KANSAS 67214
PH. (316)262-8808 FAX (316)262-0080

DESIGNED: HDF	SCALE: 1"=200'	SHEET 39
DRAWN: ARK	DATE: 08-97	
CHECKED: HDF	CED FILE: 29TH-TC2	TOTAL 94