FHWA REGION NO.		PROJECT NO.	YEAR	SHEET NO.	TOTAL SHEETS
7	KANSAS	87-2137-01	98	43	94

Loop Construction/Installation Details

Typical Conventional Loop Installation

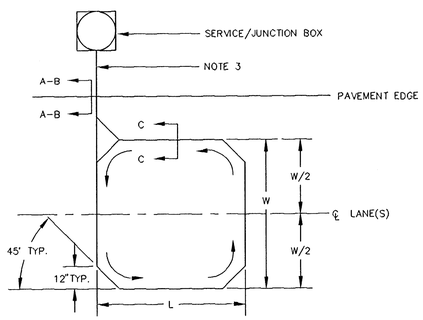

Typical Quadrapole Loop Installation

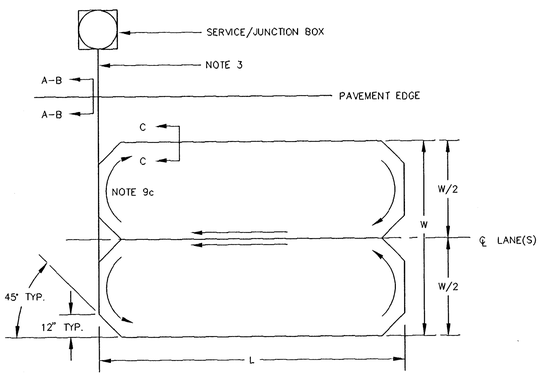

Detail A – No Curb & Gutter

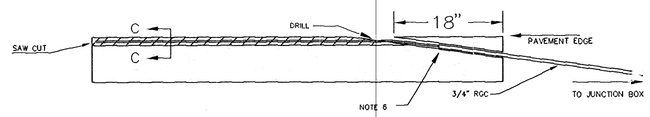

Detail B – Full Curb & Gutter

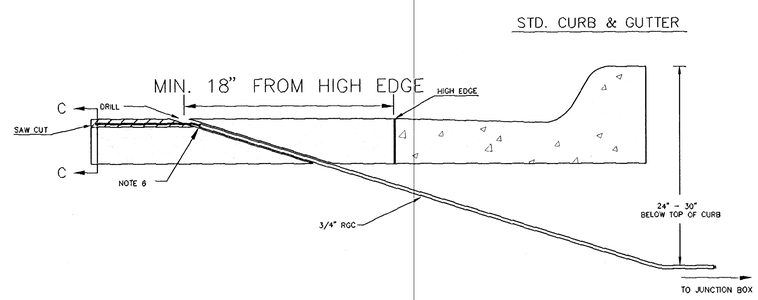

Detail C – Saw Cut

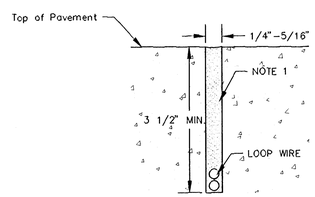

Detail D – Pavement Joint Crossing

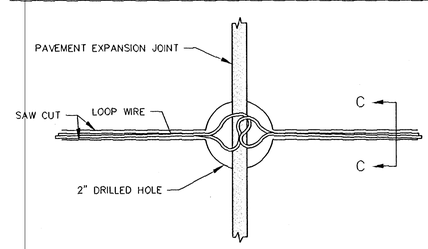

NOTES:

1. Loop saw cut shall be filled with approved sealant to within 1/8" of pavement surface.
2. All loops shall be wound in the same direction.
3. Loop wire between the loop and the service/junction box shall be twisted 6 turns per meter.
4. No expansion joint in the pavement or curb & gutter shall be utilized in the placement of loop wire runs or conduit embedding.
5. The loop wire shall not pass through any part of any drive approach and/or corner radius.
6. All conduit ends shall be sealed with duct seal to prevent loop sealant from entering conduit.
7. Loop feeder conduit shall be a minimum of 12" from any other loop feeder conduit.
8. Saw cuts running parallel with expansion joint or any other saw cut shall be a minimum of 12" apart.
9. a. Loops 25' or less – 4 turns.
   b. Loops over 25' – 3 turns.
   c. Quadrapole loops – 2-4-2 turns.
10. The loop wire shall have 2" slack at all crossings of pavement joints to allow for expansion/contration of pavement. – Detail D"

REV. DATE	COMMENTS	INT

PROJECT DESCRIPTION

LOOP DETECTOR
CONSTRUCTION/INSTALLATION DETAILS

PROJECT NUMBER
472-82787

DRAWN BY: T.M. | APPROVED BY | DATE: JULY 96
SCALE: NO SCALE | REVISED:

CITY OF WICHITA
DEPARTMENT OF PUBLIC WORKS

TRAFFIC ENGINEERING DIVISION
WM. G. McKINLEY TRAFFIC ENGINEER

SH. 43 OF 94