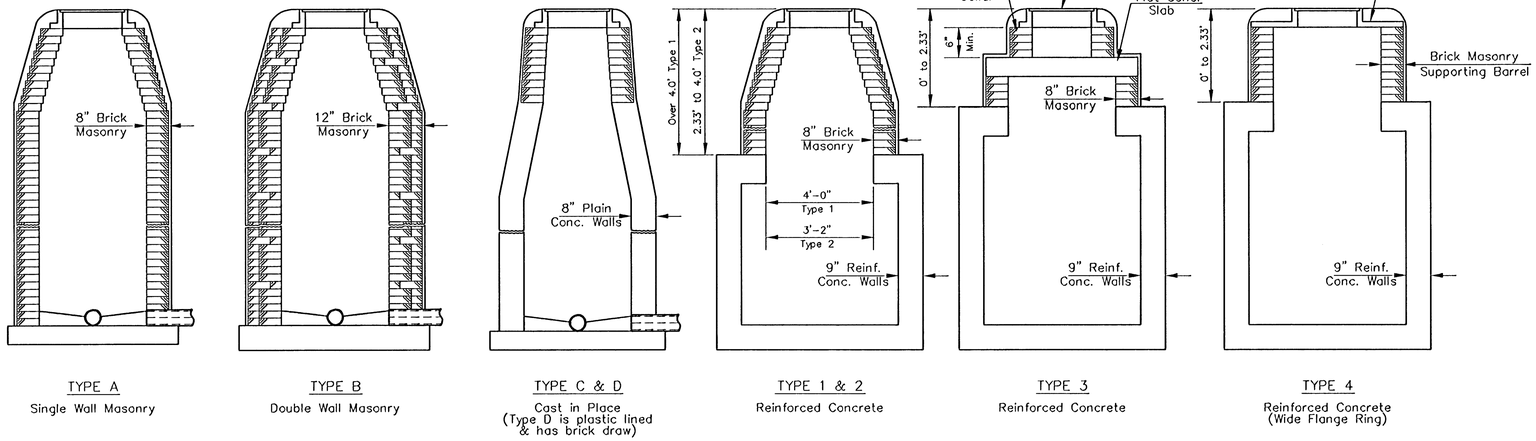

TYPE A
Single Wall Masonry

TYPE B
Double Wall Masonry

TYPE C & D
Cast in Place
(Type D is plastic lined & has brick draw)

TYPE 1 & 2
Reinforced Concrete

TYPE 3
Reinforced Concrete

TYPE 4
Reinforced Concrete
(Wide Flange Ring)

DEFINITION SKETCHES – CITY OF WICHITA STANDARD MANHOLES

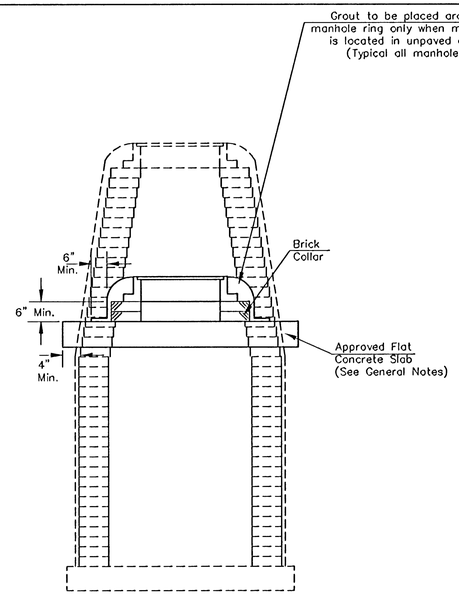

DOWNWARD ADJUSTMENT
(GREATER THAN 12")

All Types

THE APPROPRIATE PORTIONS OF THE DRAW AND BARREL OF TYPE A, B, C, D, 1 AND 2 MANHOLES SHALL BE REMOVED. A FLAT CONCRETE SLAB SHALL BE PLACED AND THE RING AND COVER RESET. ALL WORK AND MATERIALS SHALL CONFORM TO THE DETAILS SHOWN AND THE GENERAL NOTES.

COURSES OF BRICK BARREL SUPPORTING THE WIDE FLANGE RING FOR TYPE 4 MANHOLES AND FLAT CONCRETE SLAB FOR TYPE 3 MANHOLES SHALL BE REMOVED AS NECESSARY PRIOR TO RESETTING THE WIDE FLANGE RING OR FLAT CONCRETE SLAB AND RING. ALL WORK AND MATERIALS SHALL CONFORM TO THE DETAILS SHOWN AND THE GENERAL NOTES.

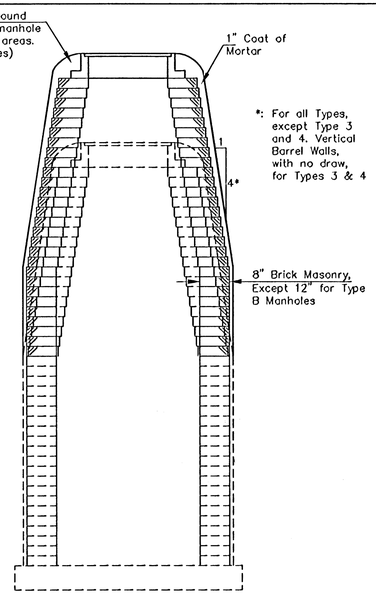

UPWARD ADJUSTMENT
(GREATER THAN 12")

All Types

THE ENTIRE DRAW OF TYPES A, B, C, D, 1 AND 2 MANHOLES SHALL BE REMOVED, THE MANHOLE BARREL RAISED THE APPROPRIATE AMOUNT, A NEW DRAW CONSTRUCTED, AND THE RING AND COVER RESET. THE UPPER PORTION OF TYPE 3 MANHOLES SHALL BE REMOVED TO THE BOTTOM OF THE FLAT CONCRETE SLAB, THE BRICK MASONRY BARREL SUPPORTING THE SLAB SHALL BE RAISED THE APPROPRIATE AMOUNT, AND THE SLAB AND RING AND COVER RESET. THE WIDE FLANGE RING AND COVER OF TYPE 4 MANHOLES SHALL BE REMOVED, THE BRICK MASONRY BARREL SUPPORTING THE RING SHALL BE RAISED THE APPROPRIATE AMOUNT AND THE RING AND COVER RESET. ALL WORK REQUIRED FOR A GREATER THAN TWELVE INCH (12") UPWARD ADJUSTMENT OF ANY MANHOLE SHALL BE ACCOMPLISHED WITH BRICK MASONRY IN ACCORDANCE WITH THE DETAILS SHOWN AND THE GENERAL NOTES.

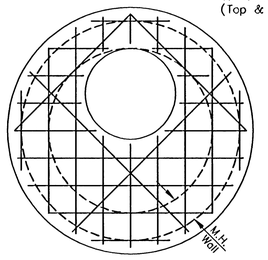

* PLAN
ALTERNATE OPENING LOCATION

*: To be used only if necessary to keep ring and cover from conflicting with curb or combined curb and gutter. Flat concrete slab shall be rotated on existing manhole to position ring and cover in pavement or behind curb.

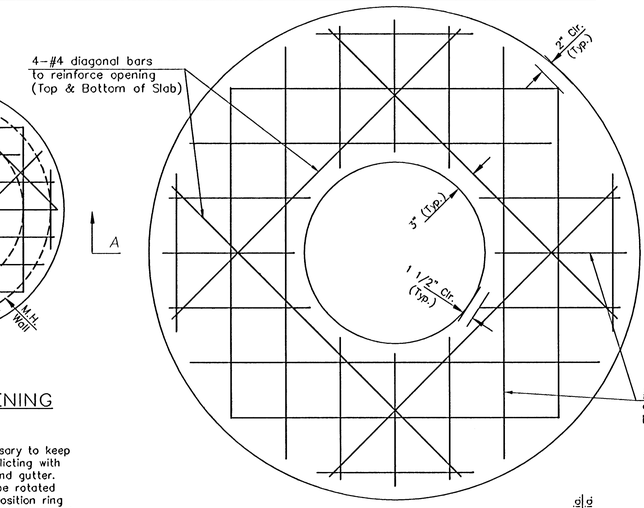

PLAN

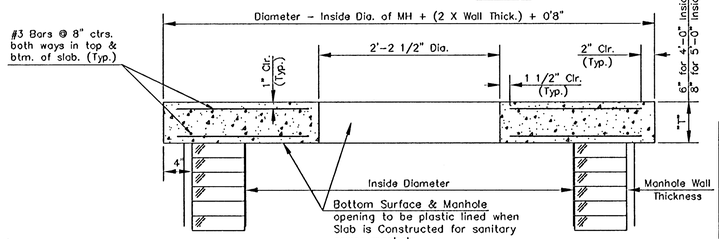

SECTION A–A
FLAT CONCRETE SLAB DETAILS

GENERAL NOTES

MANHOLES DESIGNATED FOR ADJUSTMENT SHALL BE RAISED OR LOWERED AS NECESSARY SUCH THAT THE CASTING WILL CONFORM TO THE REQUIRED ELEVATION. TOPS OF STORM OR SANITARY SEWER MANHOLES LOCATED IN PAVED AREAS SHALL BE SET FLUSH WITH THE PAVEMENT. TOPS OF SANITARY SEWER MANHOLES LOCATED IN GRASSED AREAS SHALL BE SET FOUR TENTHS OF ONE FOOT (0.40') HIGHER THAN THE FINISHED GRADE. TOPS OF STORM SEWER MANHOLES LOCATED IN GRASSED AREAS SHALL BE SET FLUSH WITH THE FINISHED GRADE. TOPS OF STORM OR SANITARY SEWER MANHOLES LOCATED IN UNPAVED TRAVEL WAYS SHALL BE SET SIX INCHES (6") BELOW FINISHED GRADE.

THE NEW TOP SPECIFIED ON THE PLANS WAS ESTABLISHED FROM THE BEST INFORMATION AVAILABLE AT THE TIME THE PLANS WERE PREPARED. THE ACTUAL TOP ELEVATION SHALL BE VERIFIED OR ESTABLISHED, IN THE FIELD, BY THE ENGINEER AT THE TIME THE ADJUSTMENT IS MADE. NO ADJUSTMENT IN BID PRICE SHALL BE MADE FOR A CHANGE IN TOP ELEVATION DEEMED NECESSARY BY THE ENGINEER.

THE ADJUSTMENT OF ALL MANHOLES WHICH ARE TO BE LOWERED OR RAISED TWELVE INCHES (12") OR LESS SHALL BE ACCOMPLISHED BY REMOVING THE EXISTING RING AND COVER AND REMOVING OR ADDING THE APPROPRIATE COURSE(S) OF BRICK AND REPLACEMENT OF THE RING AND COVER. ALL WORK SHALL BE IN ACCORDANCE WITH NOTES BELOW.

ALL UPWARD OR DOWNWARD ADJUSTMENT IN EXCESS OF TWELVE INCHES (12") SHALL BE IN ACCORDANCE WITH DETAILS AND NOTES SHOWN ON THIS SHEET.

NEW BRICK USED IN THE ADJUSTMENT OF MANHOLES SHALL CONFORM TO THE REQUIREMENTS SPECIFIED FOR GRADE MS IN A.S.T.M. C32-73 OR GRADE SW IN A.S.T.M. C62-69. BRICK SHALL HAVE NOMINAL DIMENSIONS WHICH WILL PERMIT THE ADJUSTED PORTION TO MATCH THE DIMENSIONS OF THE WALLS OF THE STRUCTURE BEING ADJUSTED. UNDAMAGED EXISTING BRICK, SALVAGED AS PART OF EXISTING MANHOLE ADJUSTMENT(S), FOR THIS PROJECT, MAY BE REUSED IN COMPLETING ADJUSTMENT(S) IF THOROUGHLY CLEANED OF EXISTING MORTAR AND IF APPROVED AS TO SUITABILITY BY THE ENGINEER.

ALL BRICK SHALL BE LAID WITH SHOVE JOINTS. PORTLAND CEMENT MORTAR, AS SPECIFIED BELOW, SHALL BE USED IN LAYING THE BRICK. THE ENTIRE OUTSIDE SURFACE OF THE MANHOLES, ADJUSTED WITH BRICK, SHALL BE PLASTERED WITH A MINIMUM OF ONE INCH (1") OF THE CEMENT MORTAR. ALL CONTACT SURFACES BETWEEN BRICK MASONRY, FLAT CONCRETE SLABS (IF REQUIRED), AND CAST IRON RINGS SHALL BE SEALED WITH A LAYER OF THE CEMENT MORTAR. BACKFILL OF ADJUSTED SECTIONS SHALL NOT BE ACCOMPLISHED UNTIL THE MORTAR HAS CURED FOR TWENTY-FOUR (24) HOURS.

MORTAR USED IN ADJUSTMENT OF MANHOLES SHALL CONTAIN EIGHT (8) SACKS OF PORTLAND CEMENT PER CUBIC YARD, FINE AGGREGATE, AND SUFFICIENT WATER TO PRODUCE A WORKABLE AND PLASTIC MIX OF SUCH CONSISTENCY AS TO PERFORM PROPERLY THE FUNCTION OF MASONRY CONSTRUCTION.

CEMENT USED FOR MORTAR SHALL BE TYPE I COMPLYING WITH THE REQUIREMENTS OF THE LATEST REVISION OF A.S.T.M. DESIGNATION C-150.

FINE AGGREGATE USED FOR MORTAR SHALL MEET THE REQUIREMENTS FOR TYPE FA-A, DIVISION 1102, OF THE "STANDARD SPECIFICATIONS FOR STATE ROAD AND BRIDGE CONSTRUCTION," KANSAS DEPARTMENT OF TRANSPORTATION, 1980 EDITION.

WATER USED FOR MORTAR SHALL MEET THE REQUIREMENTS OF DIVISION 2401, OF THE MENTIONED STANDARD SPECIFICATIONS.

AN APPROVED TYPE OF FLAT CONCRETE SLAB, CONFORMING TO THE REQUIREMENTS OF A.S.T.M. C-478, SHALL BE USED TO SUPPORT THE MANHOLE RING AND COVER WHERE IT IS NECESSARY TO LOWER MANHOLES MORE THAN TWELVE INCHES (12"). ALL SURFACES OF THE FLAT CONCRETE SLAB, FOR SANITARY SEWER MANHOLES, WHICH WOULD BE EXPOSED TO SEWER GAS SHALL BE PROTECTED BY A PLASTIC LINING. A MINIMUM SIX INCH (6") BRICK COLLAR CONFORMING TO THE SAME TYPE OF CONSTRUCTION AS SPECIFIED ABOVE SHALL BE INSTALLED BETWEEN THE MANHOLE RING AND THE FLAT CONCRETE SLAB TO FACILITATE MINOR ADJUSTMENTS IN ELEVATION.

PLASTIC LINING REQUIRED FOR FLAT CONCRETE SLABS, TO BE PLACED IN CONNECTION WITH THE ADJUSTMENT OF SANITARY SEWER MANHOLES, MAY BE AMER-PLATE T-LOCK LINER PLATE, B.F. GOODRICH LOK-RIB KOROSEAL, OR AN APPROVED EQUAL. THE PLASTIC LINING MANUFACTURER'S RECOMMENDATIONS FOR INSTALLING, SEALING JOINTS, TESTING AND INSPECTION OF THE LINING SHALL BE CONSIDERED AS INCORPORATED IN AND FORMING A PART OF THESE SPECIFICATIONS. THREE (3) COPIES OF THE PLASTIC LINING MANUFACTURER'S RECOMMENDATIONS FOR LINING INSTALLATION SHALL BE FURNISHED TO THE ENGINEER FOR APPROVAL PRIOR TO THE FABRICATION OF ANY FLAT SLABS REQUIRING PLASTIC LINING.

No.	Revision	By	Date

OAK CREEK-PHASE 1
21ST ST. N. DECEL LANE

MANHOLE ADJUSTMENT DETAILS

JAMES L. ARMOUR, P.E.– CITY ENGINEER
CITY OF WICHITA PROJECT NO. 472-84206

Professional Engineering Consultants, P.A.
303 S. TOPEKA - WICHITA, KANSAS 67202
316-262-2691 • FAX 316-262-3063

Designed by BDB, BMM	Job No. 35-05652-003	Sheet 14 of 28
Drawn by BJS	Date November 2005	

Saved 05-24-2006 8:07:58 AM by BJS
Plot Scale 1:1 06-01-2006 8:43:12 AM by BJS
O:\2004\04688\001\04688-401 ADJUS DTLS.TEMP