SERVICE BOX CONSTRUCTION/INSTALLATION DETAILS

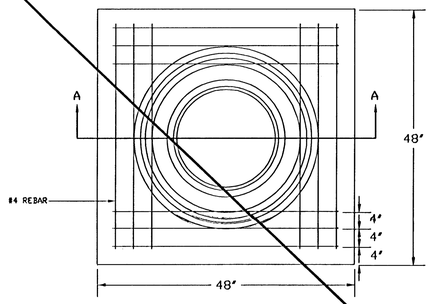

PRE-CAST CONCRETE
SERVICE BOX

(36" I.D. X 54" RCP)
with 6" CAP

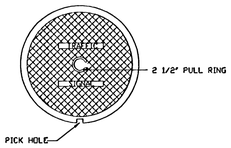

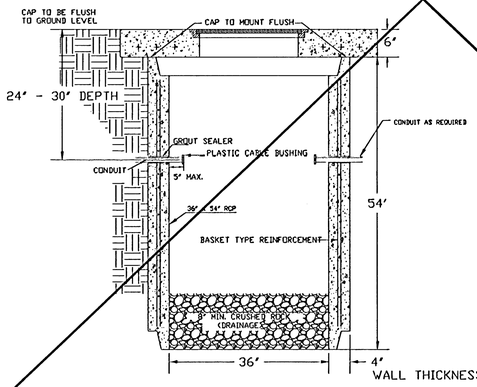

SECTION A-A

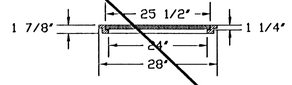

RING & COVER DETAIL

CONDUIT/DETECTOR WIRE INSTALLATION DETAILS

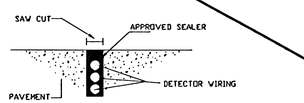

STD. CURB & GUTTER

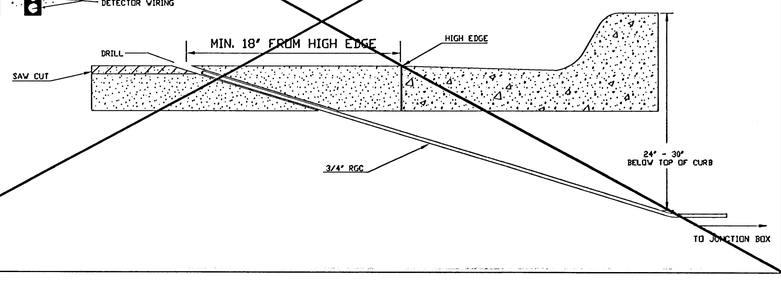

170 CONTROLLER PAD DETAILS

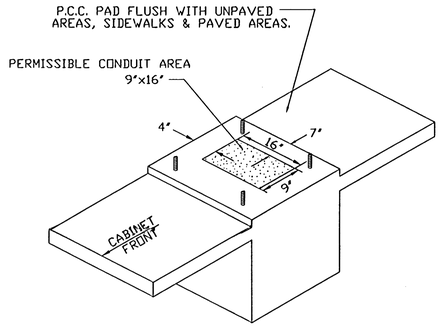

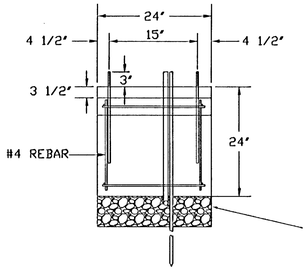

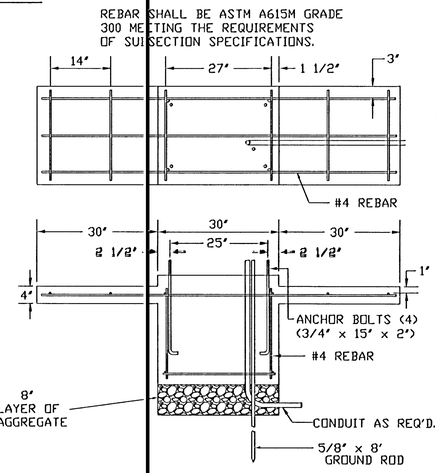

SPECIAL SERVICE BOX CONSTRUCTION/INSTALLATION DETAILS

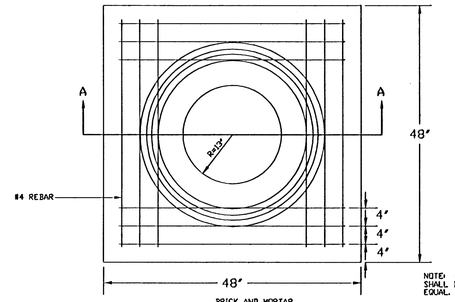

PRE-CAST CONCRETE
SERVICE BOX

(36" I.D. X 54" RCP)
with 6" CAP

NOTE: CAST IRON RING AND COVER SHALL BE NEENAH R1773 OR APPROVED EQUAL.

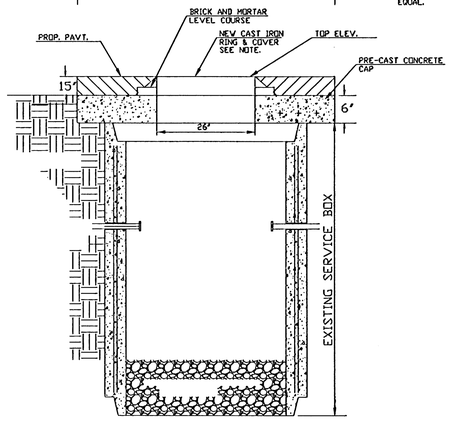

NOTES:

SERVICE & JUNCTION BOX:

1. CONDUIT CONNECTION TO BE FLUSH TO WITHIN 5" OF INSIDE FACE OF SIDE WALL, CONDUIT TO DRAIN INTO SERVICE BOX.
2. CONDUIT CONNECTIONS TO SERVICE BOX SHALL BE TERMINATED WITH PLASTIC CABLE BUSHING.
3. CONDUIT SHALL BE SEALED WITH APPROVED SEALER AT INSIDE WALL FACE.
4. ALL SERVICE & JUNCTION BOXES TO HAVE 8" OF CRUSHED ROCK.

TRENCHING:

1. DEPTH TO BE 30" MINIMUM WITH ROCK & STUBBLE FREE BACKFILL TO SERVE AS BEDDING MATERIAL. MAINTAIN MINIMUM CONDUIT DEPTH IN TRENCH.
2. BACKFILL TO BE COMPACTED IN 6" LOOSE LIFTS BY HAND OR MECHANICAL TAMPING TO A 95% STANDARD DENSITY.

CONDUIT:

1. SLOPE CONDUIT TO DRAIN AS DIRECTED BY THE ENGINEER.
2. 3" RIGID STEEL CONDUIT BTWN. SERVICE BOXES.
   1 1/4" " " " BTWN. SERVICE & JUNCTION BOXES.
   3/4" " " " BTWN. JUNCTION BOXES.
   3/4" " " " BTWN. JUNCTION BOX & DETECTOR LOOP SAW CUT

SERVICE/JUNCTION BOX, CONTROLLER PAD CONSTRUCTION/INSTALLATION DETAILS

OAK CREEK-PHASE I
21ST ST. N. OSSE LANE

SERVICE/JUNCTION BOX, CONTROLLER PAD CONSTRUCTION/INSTALLATION DETAILS

PROJECT NUMBER 472-84206		
DRAWN BY: T.M.	APPROVED BY	REVISED BY: T.M.
DATE: MAY 97		DATE: MAY, 97
DIVISION OF TRAFFIC ENGINEERING	TRAFFIC ENGINEER	SCALE NO SCALE

Saved 06-05-2006 10:44 PM by BJS
Plot Scale 1:1 06-05-2006 10:37 PM by BJS
G:\TRAFFIC\PROJECTS\84206 C-Series Box.dgn