RECAPITULATION OF QUANTITIES

ITEMS	TOTAL	UNITS
PAVEMENT MARKING (THERMOPLASTIC) (WHITE) (4")	404	LIN. FT.
PAVEMENT MARKING (THERMOPLASTIC) (YELLOW) (4")	2000	LIN. FT.
PAVEMENT MARKING (THERMOPLASTIC) (YELLOW) (12")	28	LIN. FT.
PAVEMENT MARKING SYMBOL (THERMOPLASTIC) (WHITE LEFT ARROWS)	6	EACH
PAVEMENT MARKING (THERMOPLASTIC) (WHITE) (12")	24	LIN. FT.
PAVEMENT MARKING (THERMOPLASTIC) (WHITE) (24")	0	LIN. FT.

FOR INFORMATION ONLY – BID ITEM "PAVEMENT MARKING" IS PAID AS LUMP SUM.

NOTE: ALL EXISTING MARKINGS WHICH CONFLICT WITH THE PROPOSED PLAN SHALL BE REMOVED BY GRINDING OR OTHER MECHANICAL MEANS (PAINTING OVER EXISTING MARKING WILL NOT BE ALLOWED). THIS WORK SHALL BE CONSIDERED SUBSIDIARY TO THE BID ITEM "PAVEMENT MARKING".

UNLESS OTHERWISE NOTED, DIMENSIONS ARE FROM ℄ STRIPE TO ℄ STRIPE.

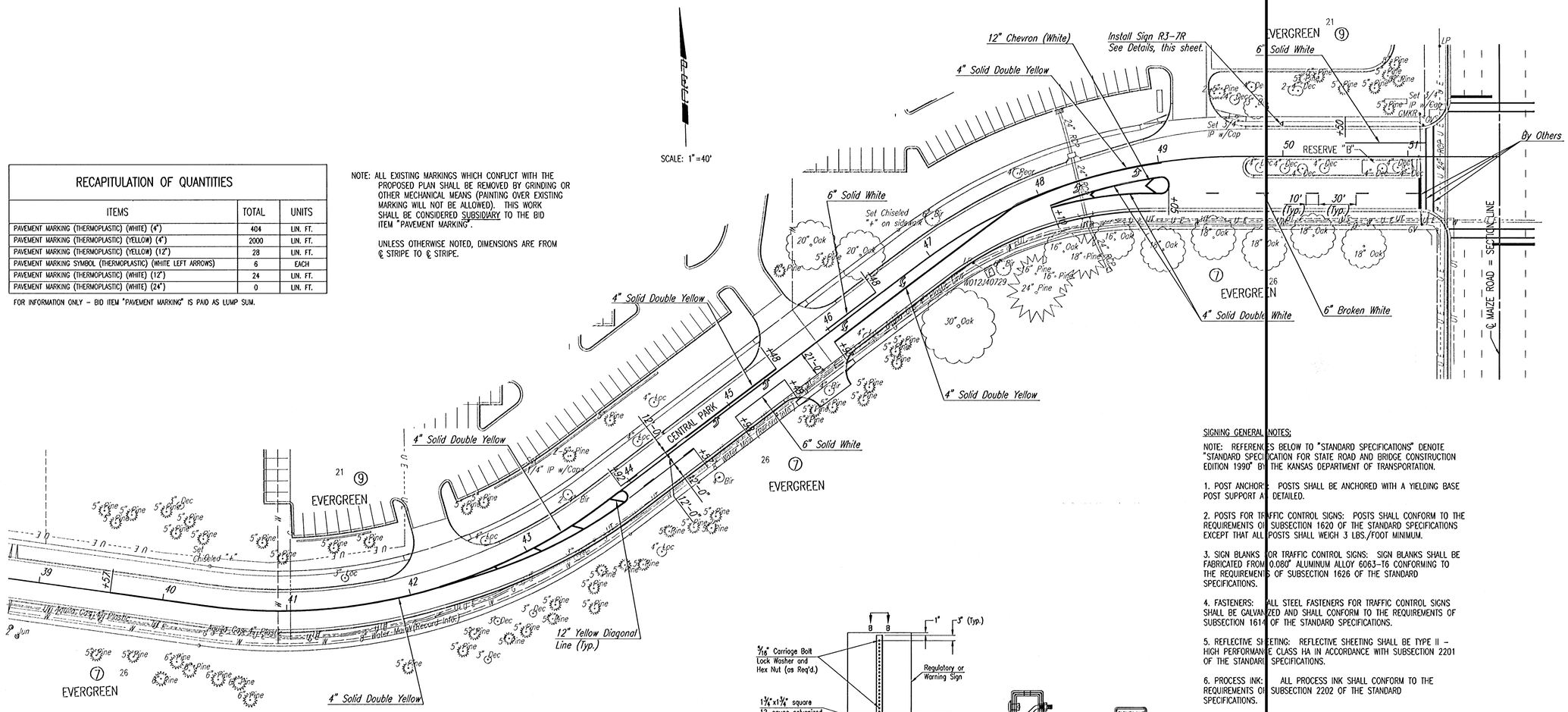

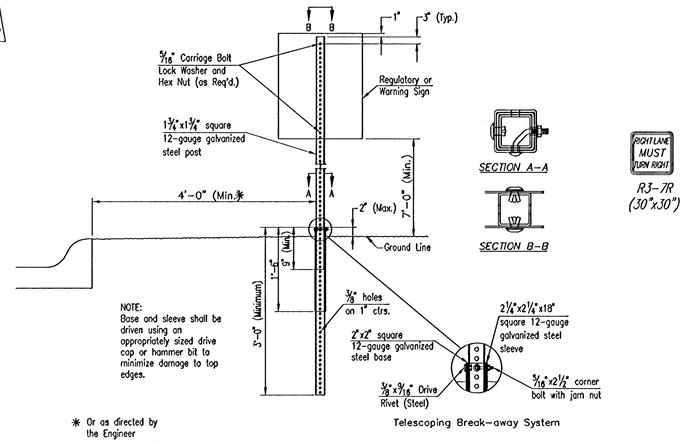

TYPICAL TRAFFIC CONTROL SIGN INSTALLATION
CURB AND GUTTER SECTION

R3-7R (30"x30")

SIGNING GENERAL NOTES:

NOTE: REFERENCES BELOW TO "STANDARD SPECIFICATIONS" DENOTE "STANDARD SPECIFICATION FOR STATE ROAD AND BRIDGE CONSTRUCTION EDITION 1990" BY THE KANSAS DEPARTMENT OF TRANSPORTATION.

1. POST ANCHORS: POSTS SHALL BE ANCHORED WITH A YIELDING BASE POST SUPPORT AS DETAILED.

2. POSTS FOR TRAFFIC CONTROL SIGNS: POSTS SHALL CONFORM TO THE REQUIREMENTS OF SUBSECTION 1620 OF THE STANDARD SPECIFICATIONS EXCEPT THAT ALL POSTS SHALL WEIGH 3 LBS./FOOT MINIMUM.

3. SIGN BLANKS FOR TRAFFIC CONTROL SIGNS: SIGN BLANKS SHALL BE FABRICATED FROM 0.080" ALUMINUM ALLOY 6063-T6 CONFORMING TO THE REQUIREMENTS OF SUBSECTION 1626 OF THE STANDARD SPECIFICATIONS.

4. FASTENERS: ALL STEEL FASTENERS FOR TRAFFIC CONTROL SIGNS SHALL BE GALVANIZED AND SHALL CONFORM TO THE REQUIREMENTS OF SUBSECTION 1614 OF THE STANDARD SPECIFICATIONS.

5. REFLECTIVE SHEETING: REFLECTIVE SHEETING SHALL BE TYPE II – HIGH PERFORMANCE CLASS HA IN ACCORDANCE WITH SUBSECTION 2201 OF THE STANDARD SPECIFICATIONS.

6. PROCESS INK: ALL PROCESS INK SHALL CONFORM TO THE REQUIREMENTS OF SUBSECTION 2202 OF THE STANDARD SPECIFICATIONS.

7. DETAILS: REGULATORY AND WARNING SIGNS SHALL CONFORM TO THE DETAILS IN "STANDARD HIGHWAY SIGNS", FHWA, 1979.

8. PERMANENT TRAFFIC CONTROL SIGNS SHALL BE MEASURED AND PAID FOR AT THE UNIT PRICE BID PER EACH "SIGN ASSEMBLY". THE PAYMENT AS SET FORTH ABOVE SHALL BE CONSIDERED FULL COMPENSATION FOR ALL EXCAVATION, BACKFILLING, POSTS, ANCHORS, FASTENERS, MATERIALS, LABOR, TOOLS AND INCIDENTALS NECESSARY TO COMPLETE THIS WORK.

ROBERT E. REMPEL LICENSED 8168 12-17-04 KANSAS PROFESSIONAL ENGINEER

No.	Revision	By	Date

NEWMARKET SQUARE
CENTRAL PARK WIDENING

MARKING PLAN

JAMES L. ARMOUR, P.E., ACTING CITY ENGINEER
CITY OF WICHITA PROJECT NO. 472-84048

Professional Engineering Consultants, P.A.
303 S. TOPEKA • WICHITA, KANSAS 67202
316-262-2691 • FAX 316-262-3003

Designed by	BER	Job No.	35-04276-0042
Drawn by	SAW	Date	JULY 2004

Sht. 9 of 18

DSNR: BER OPER: SAW SCALE: 1=40.00
J:\SENTOUT\2004\04276\2005-02-16 to City\DWG\09-Marking Plan 02-17-2005 08:34:45 am