PROJECT NO.	SHEET NO.	TOTAL SHEETS
472-83617	7	19

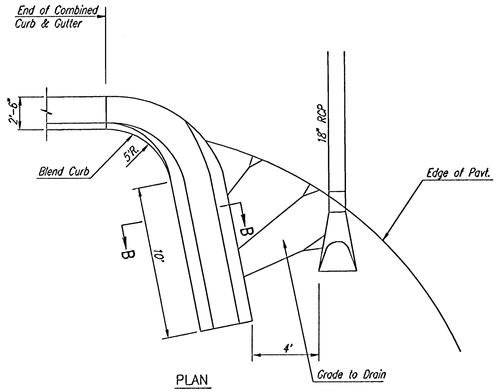

PLAN

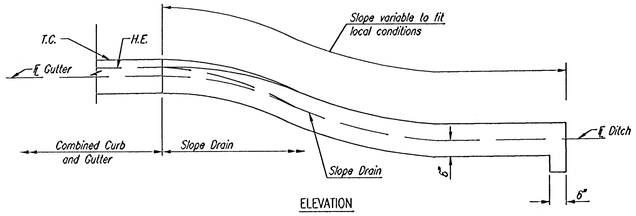

ELEVATION

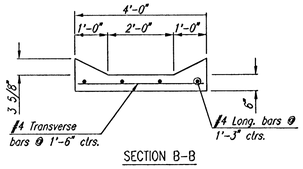

SECTION B-B

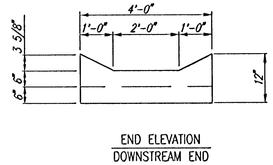

END ELEVATION
DOWNSTREAM END

SLOPE DRAIN DETAILS

SLOPE DRAIN NOTES

1 THE ENTIRE AREA OF THE SLOPE DRAIN TO BE POURED MONOLITHICALLY AND STRUCK OFF WITH A UNIFORM MINIMUM THICKNESS OF 6 INCHES; THE CURBS AND SLOPES ARE TO BE APPLIED IN THE SAME MANNER, USING THE SAME METHODS AS FOR EDGE CURB.

2 CONCRETE USED IN SLOPE DRAIN AND TOE WALL SHALL BE SAME AS THAT USED FOR COMBINED CURB AND GUTTER.

3 NO EXPANSION OR CONTRACTION JOINTS TO BE PLACED WITHIN THE LIMITS OF THE SLOPE DRAIN.

4 ALL EXPOSED EDGES SHALL BE FINISHED WITH AN EDGING TOOL.

5 ALL REINFORCING STEEL SHALL CONFORM TO ASTM A-615 SPECIFICATION GRADE 60.

6 ALL DIMENSIONS RELATIVE TO PLACEMENT OF REINFORCING STEEL ARE TO CENTERLINE OF BARS UNLESS OTHERWISE NOTED. ALL BARS ARE #4 BARS AND SHALL HAVE A MINIMUM CLEARANCE OF 1-1/2" UNLESS OTHERWISE NOTED.

7 REINFORCING STEEL IS SUBSIDIARY TO SLOPE DRAIN.

8 SLOPE DRAINS SHALL BE MEASURED AND PAID FOR AT THE CONTRACT UNIT PRICE BID PER EACH. THIS SHALL BE CONSIDERED FULL COMPENSATION FOR ALL EXCAVATION, BACKFILLING, MATERIALS, LABOR, EQUIPMENT, TOOLS, AND INCIDENTALS NECESSARY TO COMPLETE THE WORK.

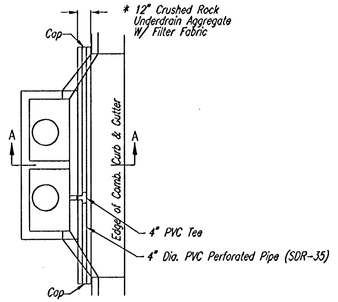

PLAN

* UNDERDRAIN AGGREGATE
PERCENT OF AGGREGATE RETAINED

1"	0
3/4 "	0-10
3/8 "	45-80
#4	90-100
#8	95-100

ROCK QUALITY SHALL CONFORM TO THE REQUIREMENTS SPECIFIED BY THE KDOT 1990 EDITION STANDARD SPECIFICATION SUBSECTION 1102 FOR DURABILITY CLASS I.

PAVEMENT UNDERDRAIN LOCATIONS		
STREET	STATION	SIDE
GROVE CT	9+89.73	Rt.

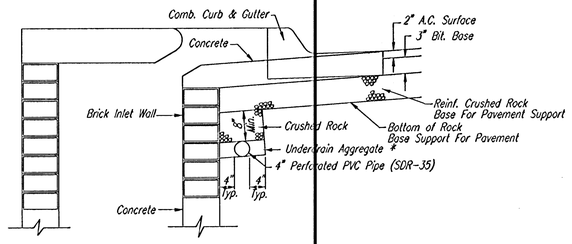

(Min. 16 Perforations Per Lin. Ft. @ 1/4" Dia.)
Perforations To Be on Bottom Half

SECTION A-A

PAVEMENT UNDERDRAIN DETAIL

NOTE: PLACE 4" PVC PERFORATED PIPE AT ALL DRAINAGE SUMP LOCATION

COST OF UNDERDRAIN SYSTEM TO BE INCIDENTAL TO THE REINFORCED CRUSHED ROCK BASE.

INLET TYPE MAY VARY FROM THAT SHOWN.

PINE BAY ESTATES

MISCELLANEOUS PAVING DETAILS

Professional Engineering Consultants, P.A.
303 S. TOPEKA • WICHITA, KANSAS 67202
316-262-2691 • FAX 316-262-3003

Designed by	BER	Checked by	
Drawn by	DEP	Date AUGUST 2002	Job No. 02331

DSNR: DEP OPER: DEP SCALE: 1=10.00
G:\2002\02331\MISCDTL 09-11-2002 08:50:35 am