

EXPANSION JOINT

NOTE: Extra Thickness to be Subsidiary to Price of Square Yards Pavement

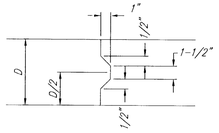

KEYWAY DETAIL

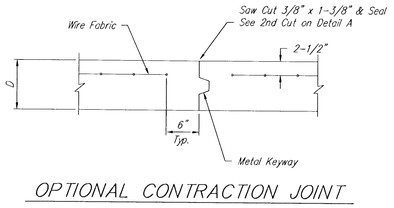

OPTIONAL CONTRACTION JOINT

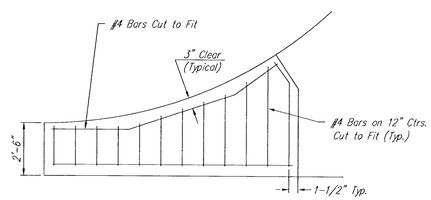

WING REINFORCING DETAIL

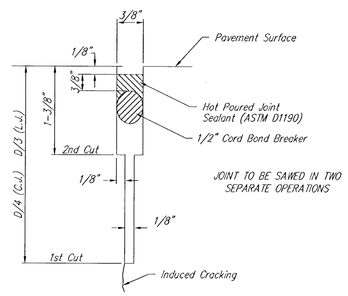

SAW JOINT DETAIL

(TYPE A)
STANDARD WHEELCHAIR RAMP
WITH DETECTABLE WARNING
CONSTRUCTION DETAIL FOR STREETS
WITH COMBINED CURB & GUTTER

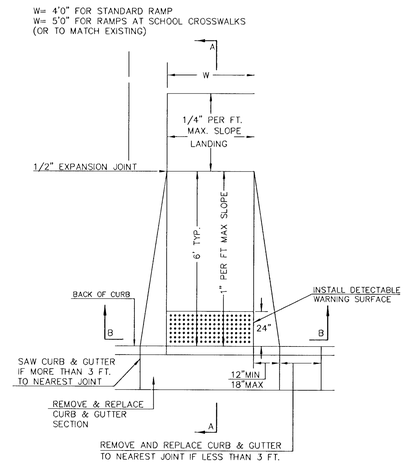

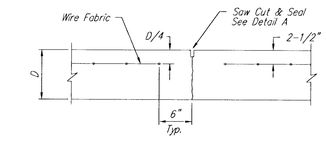

CONTRACTION JOINT DETAIL (C.J.)

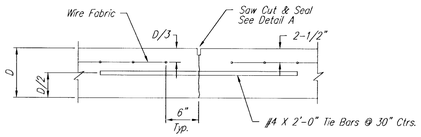

LONGITUDINAL JOINT DETAIL (L.J.)

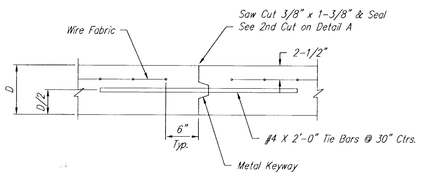

OPTIONAL LONGITUDINAL JOINT DETAIL (L.J.)

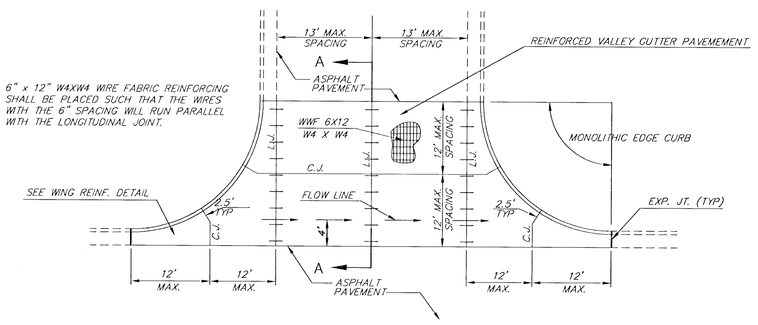

PLAN

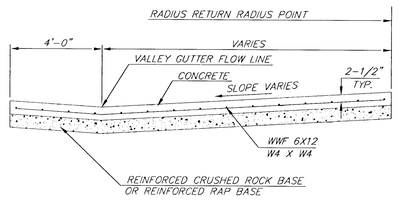

SECTION A-A

REINFORCED VALLEY GUTTER DETAIL

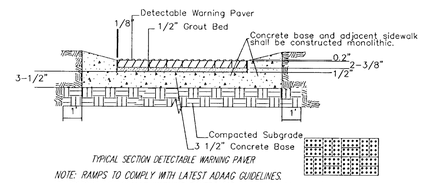

TYPICAL SECTION DETECTABLE WARNING PAVER

NOTE: RAMPS TO COMPLY WITH LATEST ADAAG GUIDELINES. PAVESTONE DETECTABLE WARNING PAVERS (OR AN APPROVED EQUAL) SHALL BE USED IN ALL WHEELCHAIR RAMPS. THE RED PAVER SHALL BE INSTALLED USING A BASKET WEAVE/PARQUET PATTERN. OTHER PATTERNS MAY BE USED WITH APPROVAL OF ENGINEER. SAND FILL JOINTS. ALIGN DOMES IN THE DIRECTION OF PEDESTRIAN TRAVEL.

SECTION B-B

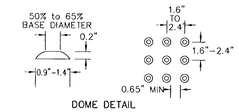

DOME DETAIL

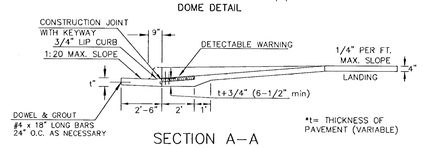

SECTION A-A

CITY OF WICHITA
PUBLIC WORKS ENGINEERING

VALLEY GUTTER DETAILS WHEELCHAIR RAMP DETAILS

CITY ENGINEER
JAMES L. ARMOUR, P.E., L.S.

PROJECT NUMBER	ACTING OCA NUMBER	DATE
472-84215	765944	

DESIGN	DRAWN
	MG

SHEET
4 OF 7

CITY ENGINEER'S OFFICE
CITY HALL - SEVENTH FLOOR
455 NORTH MAIN STREET
WICHITA, KANSAS 67202-1620
(316) 268-4501
(316) 268-4114 FAX