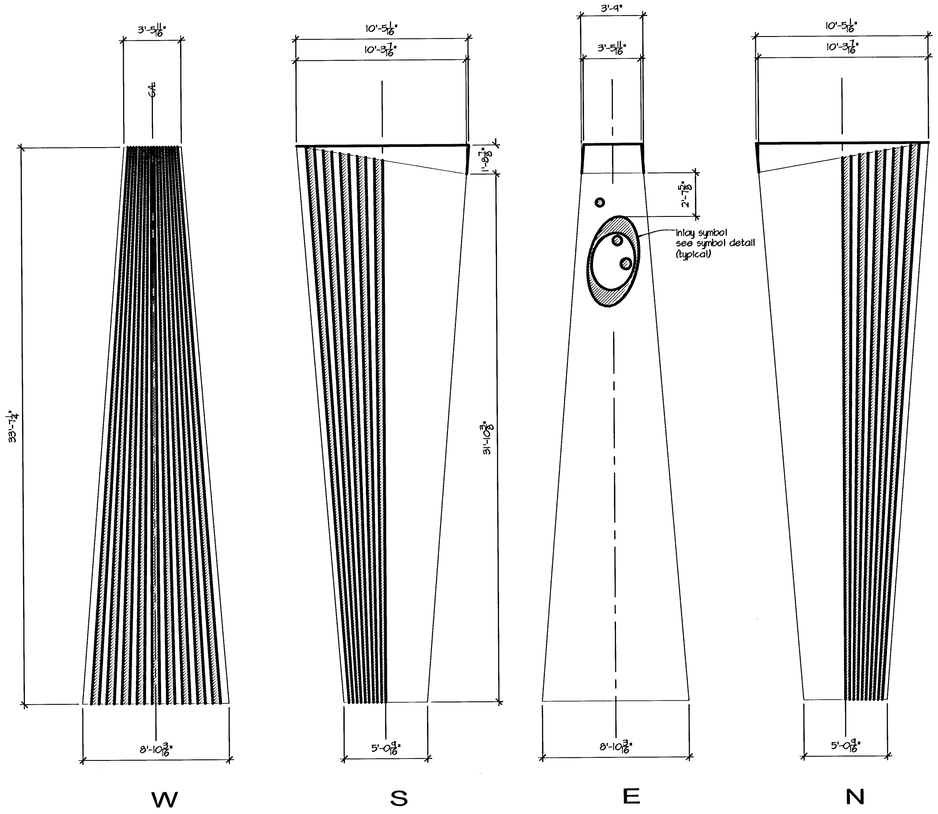

W S E N

TOWER 03

SCALE: 1/4" = 1'-0"

RUSTICATION LAYOUT PER PANEL

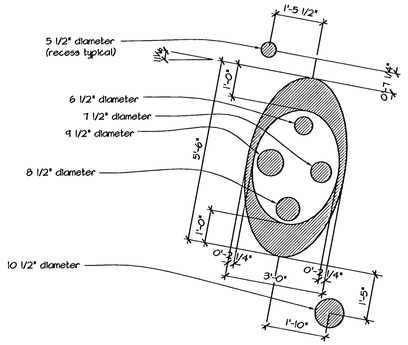

NOTES:
Symbol detail depicts the complete symbol (see tower 06) from an additive progression (towers 01 thru 06). Symbol shown is for layout reference. Refer to panel drawings for specific symbol configurations.

TYPICAL SYMBOL DETAIL

SCALE: 1/2" = 1'-0"

PLAN PER UPPER EAST PANEL

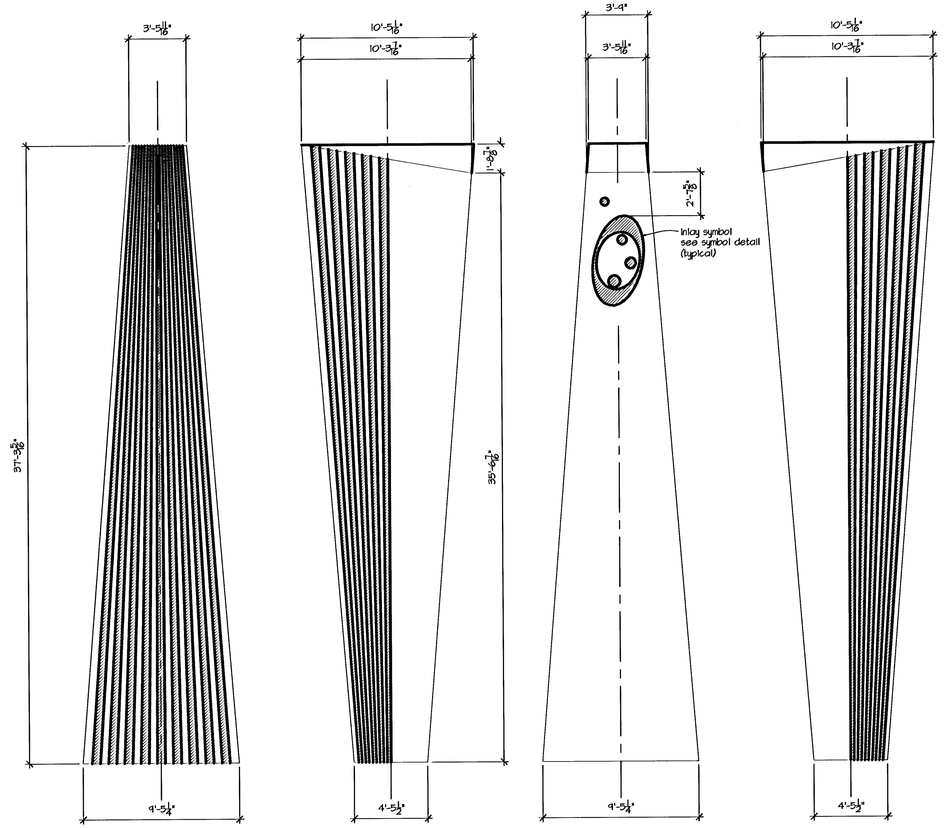

W S E N

TOWER 04

SCALE: 1/4" = 1'-0"

RUSTICATION LAYOUT PER PANEL

copyright 2002
seneca--surface patterns 02 feb 03.dwg

CITY OF WICHITA

PROJECT:	Seneca Street / Museum Drive
SHEET NAME:	Tower Surface Drawings
DRAWN BY:	ktw
DATE:	01 February 2003
SHEET:	2 of 3

kent williams 524 commerce wichita, ks 67202 323-251-5784